TUNYO

R 系列通用電機
R Series General Motors

R 系列高效電機
R Series high efficiency motors

R 系列制動電機
R Series Brake Motors

R 系列變頻電機
R Series Inverter Motors

R 系列單級蝸輪減速機
R Series Single Stage RV Gear Motors

R 系列雙級蝸輪減速機
R Series Double Stage RV Gear Motors

R 系列蝸輪減速電機使用手册
R Series RV Gear Motor Hand Book

TUNYO ELECTRONICS INDUSTRY CO.,LTD

TUNYO

The Power Of Dream

品質成就領先

技術服務社會

目錄 CONTENTS

*本公司產品因不斷改進，尺寸如有變動恕不另行通知，詳情請聯系本公司。

*Our company's products always develop in time,if there are some changes about size, we will not inform you again.So please contact us.

東洋R系列電機分類 TUNYO R series motor classification

東洋通用電機

東洋高效電機

東洋制動電機

東洋變頻電機

東洋蝸輪蝸杆減速機

主要產品 The main products

- YS通用电机
  YS general motors
- YE高效电机
  YE high efficiency motor
- YEJ制動電機
  YEJ brake motor
- YVP變頻電機
  YVP variable frequency motor

代號說明 Code description

电机代号说明 / Machine code description

YE 3-90 S-4 - B5

- B5 — 电机安装方式 / Motor mounting modality
- 4 — 极数 / Number of poles
- S — 铁芯代号 / Core length number
- 90 — 电机中心高 / Motor center height
- 3 — 3-IE3（2级能效） 2-IE2（3级能效）
- YE — 系列代码 / Series code

防护等级 / Protection grade

IP-5-5

- 5 — 防喷淋 / Fire sprinkler
- 5 — 防尘 / Dust
- IP — 国际防护表征字母 International Protection of characterization of letters

冷却方式 / Cooling mode

IC-411

- 411 — 全封闭自扇冷式 / Totally enclosed fan cooled
- IC — 国际冷却法 / The cooling method

高效電機的概述 Overview of high efficient motors

我公司开发的IE2(中国的3级能效)、IE3(中国的2级能效)超高效三相异步电动机是根据IEC60034-30及中国的GB18613-2012标准的能效等级自主设计、生产的节能产品。

IE2标准高效是老版欧洲分级方案中的EFF1，与美国的EPAct相同(60Hz)。

IE3超高效与美国的NEMA Premium相同(60Hz)。

我公司生产的IE2、IE3高效和超高效三相50Hz、60Hz、2级、4级、6级异步电动机额定输出功率范围0.75Kw-22Kw。工作制为S1，可直接起动。广泛应用于各类传动机械行业。

The company developed the IE2 (Chinese L3 (Level3) energy-efficient), IE3 (Chinese L2 (Level2) energy-efficient) over Efficient three-phase asynchronous motors are noted in the IEC60034 - 30 and Chinese GB18613 - 2012.

Standard energy efficiency rating of independent design and production of energy-saving products.

IE2 is an old version of the European standard efficiency classification scheme EFF1, the same as the United States EPAct (60Hz).

IE3 ultra-efficient the same as the United States NEMAP remium(60H z)

The production of IE2, IE3 efficient and ultra-efficient three-phase 50H z, 60 H z, 2Pole, 4-pole, 6-pole induction motor rated output power range 0 .7 5 K w - 2 2 K w. The work System for the S 1, can directly start. Widely used in various types of transmission machinery industries.

IE2、IE3不包括下列电机：	I E2, I E3 does not include the following motor;
1、YS系列三相电动机。	1.YS series three-phase motors.
2、用变频器操作的三相电动机。	2.Three-phase motor with inverter operation.

效率值標準 The efficiency value of standard

IEC60034-30:2008标准中确定的最低效率值
The lowest efficiency determination in IEC60034-30：2008 standard value

输出功率 Kw	IE2.(GB3级能效) 高效率(%)			IE3.(GB2级能效) 超高效率(%)		
	2级	4级	6级	2级	4级	6级
0.75	77.4	79.5	75.9	80.7	82.5	78.9
1.1	79.6	81.4	78.1	82.7	84.1	81
1.5	81.3	82.8	79.8	84.2	85.3	82.5
2.2	83.2	84.3	81.8	85.9	86.7	84.3
3	84.6	85.5	83.3	87.1	87.7	85.6
4	85.8	86.6	84.6	88.1	88.6	86.8
5.5	87	87.7	86	89.2	89.6	88
7.5	88.1	88.7	87.2	90.1	90.4	89.1
11	89.4	89.8	88.7	91.2	91.4	90.3
15	90.8	90.6	89.7	91.9	92.1	91.2
18.5	90.9	91.2	90.4	92.4	92.6	91.7
22	91.3	91.6	90.9	92.7	93	92.2

銘牌信息 Brand information

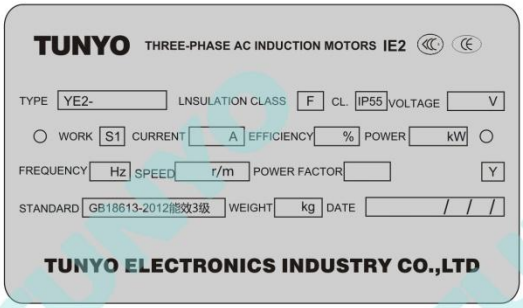

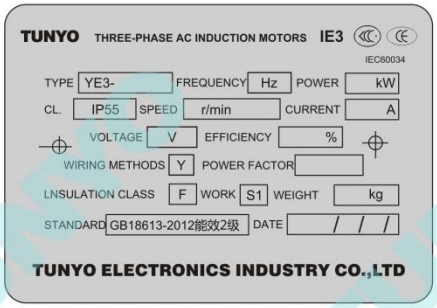

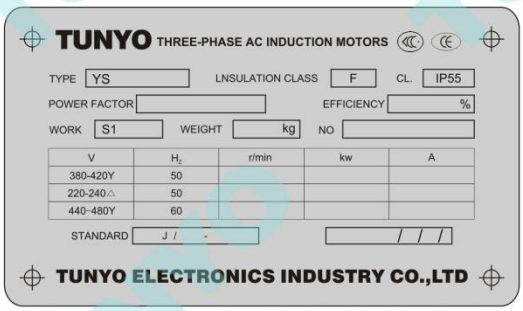

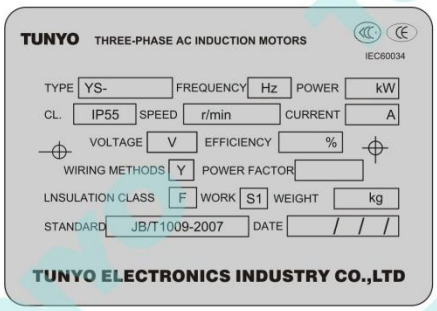

結構特點 The structural characteristics

从0.06Kw–22Kw的功率等级有12种机座规格。

0.06Kw–7.5Kw接线盒与机座整体铝合金压铸结构，密封性好，完全符合IP56外壳防护等级标准，接线盒每侧均配备有两个出线孔。根据用户所需要出线方向可在现场临时定。

机座配有可拆卸的底脚，电机可旋转90° 安装，整机结构紧凑，外观为正方形，改变了市场上传统的圆形外壳。前后端盖固定螺栓采用隐形设计。

采用低噪声静音轴承，使电机运行起来更平稳，噪音更低。

From 0.06Kw power level to 22Kw power level ,we have 12 kinds of frame size .

0.06Kw-7.5Kw junction box and the base structure of the overall aluminum die-casting, sealing, and in full compliance with IP56 enclosure rating standards, junction boxes on each side are equipped with two outlet holes. As noted in the direction needed to qualify the user in the field temporarily fixed.

Base with a removable bottom foot ,motor can be rotated 90 ° to install, compact structure, the appearance of the square, Front cover bolts using stealth design.

Low noise silent bearings, the motor running more smoothly, lower noise.

使用的主要原材料 The main raw material

0.06Kw–7.5Kw电机外壳为压铸铝合金，11Kw–22Kw外壳为高强度铸铁。

轴料为40Cr钢调质处理。

电磁线采用Qz–2/155、QZY–2/180。

定转子铁芯采用DW470、DW600。

0.06Kw-7.5Kw motor housing is die-cast aluminum, 11Kw-22Kw for high-strength cast iron housings.

40Cr steel shaft material for quenching.

Magnet wire using QZ-2/155, QZY-2/180.

Stator and rotor core using DW470, Dw600.

表面防護 Surface protection

电机外表面均采用喷塑处理。

外露螺栓均采用不锈钢材料制造。

The outer surface of the motor using spray treatment.

Exposed bolts are made of stainless steel.

絶縁 Insulation

东洋电机均采用F级绝缘系统，B级温升，最高允许环境温度为40°，最低环境温度为-15°，超过此值范围用户应提出要求。

温升考核限值为电阻法80K。

TUNYO motors are Class F insulation system, B-level rise, the maximum permissible ambient temperature of 40 °, the minimum ambient temperature of -15 °, apart from this value range ,user should request extra service.

Temperature rise test limit is resistance assessment method 80K.

雙頻電機的説明 The dual frequency dual pressure motor explain

本公司生产的双频双压电机，频率为50/60HZ，电压为(380V-420V)/(440V-480V)。当频率是50HZ，电机接线方式为“Y”型接法时，则输入电压在380V至420V都可使用。而电机接线方式为“△”接法时，则输入电压在220V至240V都可使用。当频率是60HZ，电机接线只能为“Y”型接法，则输入电压在440V至480V都可使用。

The company production of the dual frequency dual pressure motor；frepuency is 50/60Hz,voltage(380～420V)/(440～480V)。when the frequency is 50Hz,the motor wiring for the“Y”type connection,the input voltage connetion,the input voltage can be used in 380V to 420V,and the motor wiring for the “△”connection the input voltage can be used in 220V to 240V when the frequency is 60Hz the motor wiring is connected to“Y”,then input voltage can be used in 440V to 480V.

統一標準 Standards

所有通用电机执行统一的制作标准。

结构及安装型式GB/T997-2008，对应标准IEC60034-7。

输出功率及安装尺寸公差GB/T4772.1-1999，对应标准IEC60072-1。

电气规范GB/T755-1987对应标准IEC60034-1。

外壳防护等级GB/T4942.1-2008对应标准IEC60034-5。

噪音GB/T10069.1-2006对应标准IEC60034-9。

振动GB/T10068-2008对应标准IEC60034-14。

All general motors implementation of a unified production standards.

Structure and mounting is GB / T997-2008, which corresponds to the standard IEC60034-7.

Output power and install dimensional tolerances is GB / T4772.1-1999, which corresponds to the standard IEC60072-1.

Electrical Code is GB / T755-1987 which corresponds to the standard IEC60034-1.

Enclosure rating is GB / T4942.1-2008 which corresponds to the standard IEC60034-5.

Noise is GB / T10069.1-2008 which corresponds to the standard IEC60034-9.

Vibration is GB / T10068-2008 which corresponds to the standard IEC60034-14.

工作原理 Operating principle

电动机是一种旋转式电动器具，它将电能转变为机械能。利用定子绕组和转子组成一个磁场回路，当定子绕组通过交流电时，转子鼠笼中有电流通过而产生一个旋转磁场使转子以固定的转速转动。这个转速为电机的同步转速n，它的取值与电源的频率(f)及电机绕组的极数(P)有关，即n0=60×f/P(转/分)。当旋转磁场使用电机转子产生感应电流时，转子磁场受到电磁力的牵引而转动，因此定子磁场与转子磁场产生一个转速差异，并且差异越大，转子上产生的电磁转矩也就越大，因此电机的输出转速与同步转速也就存在差异，这个差异以转差率(S)表示S=no−n/no×100%
一般电机在额定点时转差率S为0.06左右。

The motor is a rotary electric appliance, it is converted to electrical energy to mechanical energy. Use of the stator winding ,The group consisting of a magnetic circuit and the rotor, stator winding through when AC, the rotor cage has Current generating a rotating magnetic field of the rotor is rotated by a fixed speed. The speed of electricity Machine synchronous speed n, its value and power of the frequency (f) and Poles (P) on the motor windings, That n0 = 60 × f / P (r / min). When the rotating magnetic field induced current of the motor rotor, the rotor magnetic

Field by the electromagnetic force and rotates, so the stator and the rotor magnetic field produces a speed Difference, and the greater the difference, the electromagnetic torque on the rotor produced greater, the output of the motor Speed a nd synchronous speed will differ, this difference in slip (S) said S = no-n/no × 100%.

General Motor slip at the rated point S is about 0.06.

電動機的運行特性 The operating characteristics of motor

电动机在带负载运行时，其实际输出功率(P)大小的恒功率等于实际负载的需求功率。负载的增加或减少，电机的输出功率随之增加或减少。电机在不同工作点时，转速n、转矩TN、输出功率P、功率因数COSΦ、效率η、电流I等将随着负载的变化而变化(如图1)，这种变化是电机运行特性决定的。

When the motor is running with load, the actual output power (P) is equal to the actual power load demand. Increasing or decreasing the load, the output power of the motor affect accordingly. When Motor work in different working points, the speed n, the torqueTN, the output power P, the power factor COSφ, efficiency η, electric current I, will change as the load changes (Figure 1), this change is to run the motor characteristics decision.

電機工作原理 Motor operation

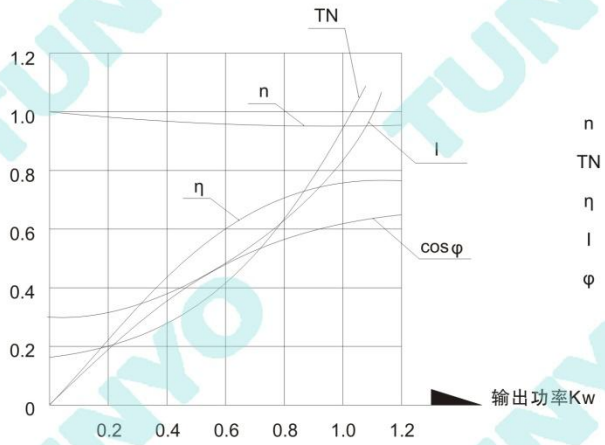

图一/Figure1

n —— 工作转速 Working speed
TN —— 转矩 Torque
η —— 效率 Efficiency
I —— 电流 Electric current
φ —— 功率因数 Power factor

从图1中可看出，从空载到加载，随着电机输出功率的增大，电机转速(n)稍有下降。转矩(M)随着输出功率增大而相对增大。效率(η)、功率因素(COSΦ)当输出功率增大到50%额定值以上时保持基本稳定。

As we can be seen from Figure 1, from empty-load to load, the output power increasesing, the motor rotation Speed (n) decreased slightly. Torque (M) increases as the output power is relatively increased. Efficiency (η), the power factors (COSφ) remain stable when the output power is increased to more than 50% of rated value.

二個轉矩特性 The two torque characteristics

1、额定转矩TN/The rated torque TN

电机在额定电压下以额定转速(n0)运行，输出额定功率(P)时，电机转轴上输出的

转矩：$TN=\dfrac{P}{\dfrac{2\times\pi\times n}{60}}$ 牛顿・米

Motor rated speed (n 0) is running at rated voltage, Rated output power (P), the output of the motor shaft

TN=P/2× η ×n/60(orque:Nm)

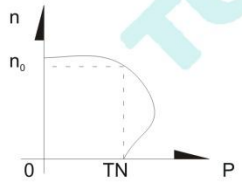

图2/Figure2

電機工作原理 Motor operation

2、最大转矩Tmax / the maximum torque Tmax

电动机带动负载的能力。
如果TL > Tmax电机将会因带不动负载而停转。TL为负载转矩。$Tmax=KV1^2 \frac{1}{2\times20}$

Motor driven load.
IF TL> Tmax motor will not move due to the load with The stall. TL is the load torque.
Tmax = KV1 2/1/2 × 20

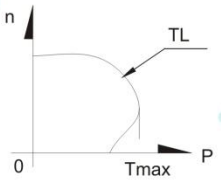

图3 / Figure 3

对于三相电动机，同时按相同倍数提高或降低电动机的额定电压和频率是允许的。需要说明的是:当电动机工作电压偏离额定值时，电动机的起动转矩TN、最小转矩Tn、最大转矩Tmax等将受到影响。力矩大小与电压的平方成正比。

For three-phase motors, while increasing multiples of the same Or reduce the motor's rated voltage and frequency are allowed. It should be noted that: When the motor work

For three-phase motors, while increasing multiples of the same Or reduce the motor's rated voltage and frequency are allowed. It should be noted that: When the motor work

Voltage excursions, the motor starting torque TN, minimum torque Tn, maximum torque Tmax Etc. will be affected.

The size of the torque proportional to the square of the voltage.

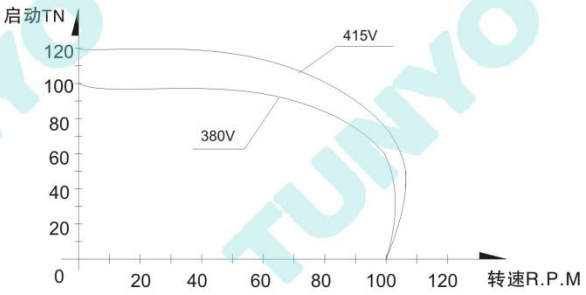

图4/Figure3

運行環境 The operating environment

一般用途的电动机，其定额应为最大连续定额,并能按S1工作制运行。

S1–连续工作制：电动机在恒定负载下运行，运行时间足以达到热稳定。

S2–短时工作制：电动机在恒定负载下，按给定的时间运行，改时间不足以达到热稳定，随之断电，然后停止转动有足够时间，使电动冷却到环境温度。

在额定电压，额定频率下，使用的环境空气温度不超过–15≤Q≤40°

海拔高度不超过1000米。绝缘等级F级，定子绕组温升考核80K。外壳防防：IP54、IP55、IP56。冷却方式：IC411。

本公司生产的电动机均为S1工作制。外壳防护如无特殊要求均按IP54生产。

过载系数：$\lambda = \frac{Tmax}{TN}$

General-purpose motor, the maximum continuous rating should be fixed, and can run in S1 duty.

S1-continuous duty: the motor running at constant load, running time sufficient to achieve thermal stability.

S2-short-time work: the motor at a constant load, running at a given time, the time

Sufficient to achieve thermal stability, along with power, and there is sufficient time to stop the rotation, to the ring of the electric cooling Ambient temperature.

At rated voltage, rated frequency, ambient air temperatures do not exceed -15 ≤ Q ≤ 40 °C Not more than 1000 meters above sea level. Insulation class F, the stator winding temperature rise assessment 80K. Anti shell

Proof: IP54, IP55, IP56. Cooling method: Ic411.

The company produces both S1 motor duty. Enclosure protection according to IP54 if no special requirements Produce.

Overload factor:$\lambda = Tmax / TN$

注意 Note

1、三相电动机的Tmax和电压的平方成正比，所以对电压的波动很敏感，使用时要注意电压的变化。

Three-phase motor is proportional to the square of the voltage and Tmax, it is sensitive to voltage fluctuations, Note the use of the voltage variation.

2、工作时一定使负载的转矩TL ＜Tmax，否则电机将会停转或过热而烧毁。

Must make the work load torque TL <Tmax, otherwise the motor will stall or overheat.

電機應用規範 The motor application speacification

◆ 额定电压和频率 The rated voltage and frequency

每种型号的电机都规定了额定工作电压及频率。铭牌上有标示。电机在使用时要检查电源电压和频率与电机规定值相符, 如果不符合将不能保证电机的性能指标有效的发挥，严重时将会造成一定的人身伤害。

Each model provides motors are rated working voltage and frequency. There are marked on the nameplate. Motor When used to check the value of the supply voltage and frequency match the motor provides power if the match can not be guaranteed Performance machine to function effectively, will cause some serious bodily injury.

所有电动机的电源电压，不得超过或降低±5%，频率不得偏离额定的±1%。

All motor supply voltage must not exceed or reduce ± 5%, shall not deviate from the nominal frequency ± 1%.

三相异步电动机在额定频率下可按△形接线和Y形接线。电动机在这两种接法的额定值下运行将保持完全相同的运行特性。按照国家电源标准，三相异步电动机3Kw及以下按Y形接线380/50Hz。△形接线220V/50Hz提供。4Kw及以上按△形接线，380/50Hz提供。如果用户有其它特殊要求，订货时可提出。

Three-phase asynchronous motors at rated frequency can be Y-shaped wiring and wiring. Motors which in this ratings run two configurations will remain the same operating characteristics. According to the national power standards, Three-phase asynchronous motor 4Kw and below by a Y-shaped junction 380/50Hz. -shaped wiring 220/50Hz mention Supply. 4Kw and over by △ -shaped wiring, 380/50Hz available. If you have other special requirements, please let us know when making the order.

TUNYO

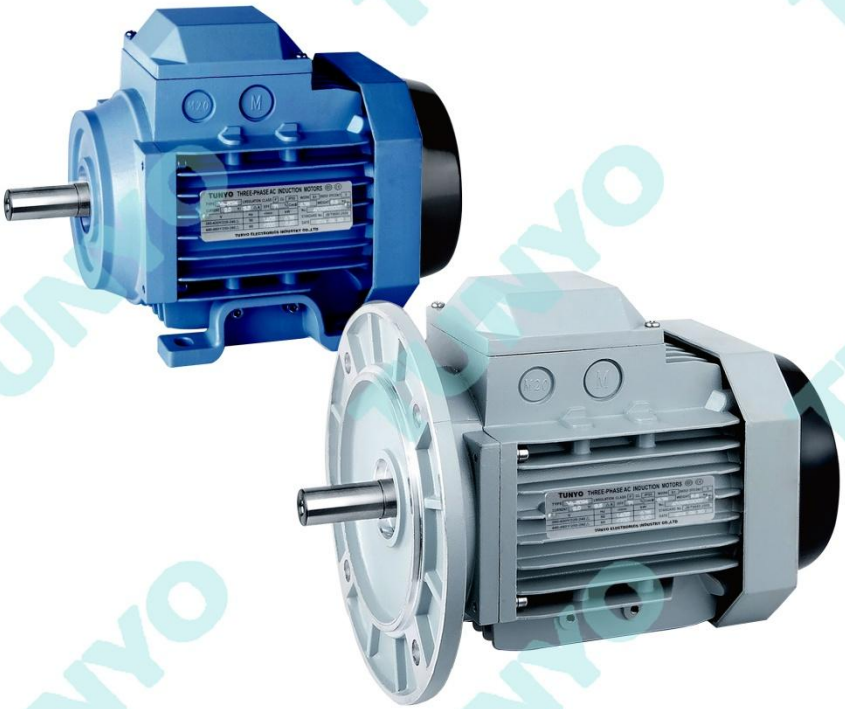

東洋通用電機

TUNYO GENERAL MOTORS

PROFESSIONAL MANUFACTURER OF POWER TRANSMISSION

DESIGN PHILOSOPHY: To follow the law, but always beyond.

BUSINESS PHILOSOPHY: Design for customer demand , dedication for customer satisfaction

YS系列技術參數 YS series motor technology parameters

3000r/min 380V 50Hz

型号 TYPE	额定功率 RATED OUTPUT		额定转速 RATED SPEED	效率 EFFICENCY	功率因数 POWER FOCTOR	额定电流 RATED CURRENT	额定转矩 RATED TORQUE	堵转转矩 LOCKED ROTOR TORQUE / 额定转矩 RATED TORQUE	最大转矩 MAXIMUM TORQUE / 额定转矩 RATED TORQUE	堵转电流 LOCKED ROTOR CURRENT / 额定电流 RATED CURRENT
	Kw	HP	rpm	η%	COSφ	A	Nm	Ts/Tn	Tmax/Tn	Is/In
YS－5612	0.09	1/8	2800	62.0	0.68	0.32	0.307	2.3	2.3	6.0
YS－5622	0.12	1/6	2800	67.0	0.71	0.38	0.410	2.3	2.3	6.0
YS－6312	0.18	1/4	2800	69.0	0.75	0.53	0.614	2.3	2.3	6.0
YS－6322	0.25	1/3	2800	72.0	0.78	0.68	0.853	2.3	2.3	6.0
YS－7112	0.37	1/2	2800	73.5	0.80	0.96	1.26	2.3	2.3	6.0
YS－7122	0.55	3/4	2800	75.5	0.82	1.35	1.88	2.3	2.3	6.0
YS－8012	0.75	1	2800	76.5	0.85	1.75	2.56	2.2	2.3	6.0
YS－8022	1.1	1.5	2800	77.0	0.85	2.55	3.75	2.2	2.3	7.0
YS－90S－2	1.5	2	2840	78.5	0.85	3.42	5.04	2.2	2.3	7.0
YS－90L－2	2.2	3	2840	81.0	0.86	4.80	7.40	2.2	2.3	7.0

1500r/min 380V 50Hz

型号 TYPE	额定功率 RATED OUTPUT		额定转速 RATED SPEED	效率 EFFICENCY	功率因数 POWER FOCTOR	额定电流 RATED CURRENT	额定转矩 RATED TORQUE	堵转转矩 LOCKED ROTOR TORQUE / 额定转矩 RATED TORQUE	最大转矩 MAXIMUM TORQUE / 额定转矩 RATED TORQUE	堵转电流 LOCKED ROTOR CURRENT / 额定电流 RATED CURRENT
	Kw	HP	rpm	η%	COSφ	A	Nm	Ts/Tn	Tmax/Tn	Is/In
YS－5614	0.06	1/12	1400	56.0	0.58	0.28	0.410	2.4	2.4	6.0
YS－5624	0.09	1/8	1400	58.0	0.61	0.39	0.614	2.4	2.4	6.0
YS－6314	0.12	1/6	1400	60.0	0.63	0.48	0.819	2.4	2.4	6.0
YS－6324	0.18	1/4	1400	64.0	0.66	0.65	1.23	2.4	2.4	6.0
YS－7114	0.25	1/3	1400	67.0	0.68	0.83	1.71	2.4	2.4	6.0
YS－7124	0.37	1/2	1400	69.5	0.72	1.12	2.52	2.4	2.4	6.0
YS－8014	0.55	3/4	1400	73.5	0.73	1.56	3.75	2.4	2.4	6.0
YS－8024	0.75	1	1400	75.5	0.75	2.01	5.12	2.3	2.4	6.5
YS－90S－4	1.1	1.5	1420	78.0	0.78	2.75	7.40	2.3	2.4	6.5
YS－90L－4	1.5	2	1420	79.0	0.79	3.65	10.1	2.3	2.4	6.5

YS系列技術參數 YS series motor technology parameters

1000r/min 380V 50Hz

型号 TYPE	额定功率 RATED OUTPUT		额定转速 RATED SPEED	效率 EFFICENCY	功率因数 POWER FOCTOR	额定电流 RATED CURRENT	额定转矩 RATED TORQUE	堵转转矩 LOCKED ROTOR TORQUE / 额定转矩 RATED TORQUE	最大转矩 MAXIMUM TORQUE / 额定转矩 RATED TORQUE	堵转电流 LOCKED ROTOR CURRENT / 额定电流 RATED CURRENT
	Kw	HP	rpm	η%	COSφ	A	Nm	Ts/Tn	Tmax/Tn	Is/In
YS－7116	0.18	1/4	910	59.0	0.61	0.76	1.89	2.0	2.0	5.5
YS－7126	0.25	1/3	910	63.0	0.62	0.97	2.62	2.0	2.0	5.5
YS－8016	0.37	1/2	910	68.0	0.62	1.33	3.88	2.0	2.0	5.5
YS－8026	0.55	3/4	910	71.0	0.64	1.84	5.77	2.0	2.0	5.5
YS－90S－6	0.75	1	920	73.0	0.68	2.30	7.79	2.0	2.1	5.5
YS－90L－6	1.1	1.5	920	74.0	0.70	3.23	11.4	2.0	2.1	6.0

YS系列安裝尺寸 Installation dimension of YS series motor

◆IM B3 H56–90

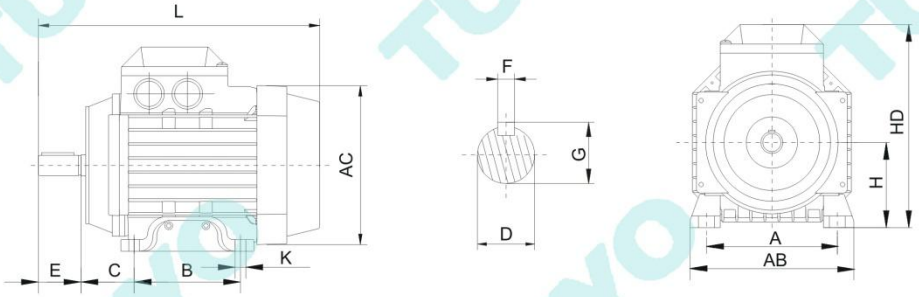

机座号 Frame size	外型及安装尺寸 Installation Dimensions												
	A	B	C	D	E	F	G	H	K	AB	AC	HD	L
56	90	71	36	ø9	20	3	10.5	56	ø5.8	107	102×102	145	190
63	100	80	40	ø11	23	4	12.5	63	ø7	122	120×120	167	220
71	112	90	45	ø14	30	5	16	71	ø7	136	130×130	180	245
80	125	100	50	ø19	40	6	21.5	80	ø10	154	145×145	190	265
90S	140	100	56	ø24	50	8	27	90	ø10	180	160×160	205	316
90L	140	125	56	ø24	50	8	27	90	ø10	180	160×160	205	326

YS系列安裝尺寸 Installation dimension of YS series motor

◆IM B14 H56–90

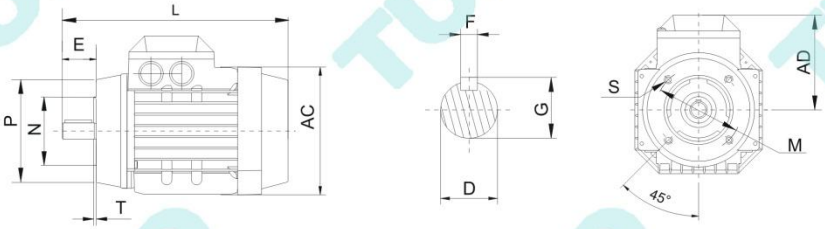

机座号 Frame size	外型及安裝尺寸 Installation Dimensions											
	D	E	F	G	M	N	P	S	T	AC	AD	L
56	ø9	20	3	10.5	65	50	80	M5	2.5	102×102	91	190
63	ø11	23	4	12.5	75	60	90	M5	2.5	120×120	104	220
71	ø14	30	5	16	85	70	105	M6	2.5	130×130	107	245
80	ø19	40	6	21.5	100	80	110	M6	3.0	145×145	115	265
90S	ø24	50	8	27	115	95	120	M8	3.0	160×160	122	316
90L	ø24	50	8	27	115	95	120	M8	3.0	160×160	122	326

◆IM B34 H56–90

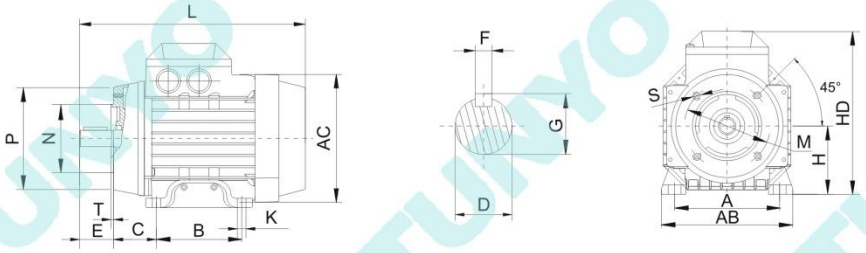

机座号 Frame size	外型及安裝尺寸 Installation Dimensions																	
	A	B	C	D	E	F	G	H	K	M	N	P	S	T	AB	AC	HD	L
56	90	71	36	ø9	20	3	10.5	56	ø5.8	65	50	80	M5	2.5	107	102×102	145	190
63	100	80	40	ø11	23	4	12.5	63	ø7	75	60	90	M5	2.5	122	120×120	167	220
71	112	90	45	ø14	30	5	16	71	ø7	85	70	105	M6	2.5	136	130×130	180	245
80	125	100	50	ø19	40	6	21.5	80	ø10	100	80	110	M6	3.0	154	145×145	190	265
90S	140	100	56	ø24	50	8	27	90	ø10	115	95	120	M8	3.0	180	160×160	205	316
90L	140	125	56	ø24	50	8	27	90	ø10	115	95	120	M8	3.0	180	160×160	205	326

YS系列安裝尺寸 Installation dimension of YS series motor

◆IM B5 H63–90

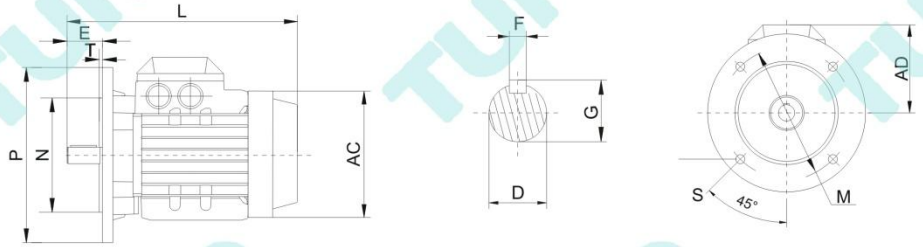

机座号 Frame size	外型及安装尺寸 Installation Dimensions											
	D	E	F	G	M	N	P	S	T	AC	AD	L
63	ø 11	23	4	12.5	115	95	140	10	3.0	120×120	104	220
71	ø 14	30	5	16	130	110	160	10	3.5	130×130	107	245
80	ø 19	40	6	21.5	165	130	200	12	3.5	145×145	115	265
90S	ø 24	50	8	27	165	130	200	12	3.5	160×160	122	316
90L	ø 24	50	8	27	165	130	200	12	3.5	160×160	122	326

◆IM B35 H63–90

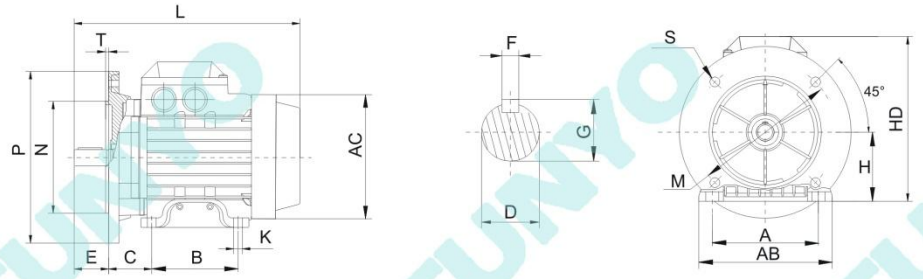

机座号 Frame size	外型及安装尺寸 Installation Dimensions																	
	A	B	C	D	E	F	G	H	K	M	N	P	S	T	AB	AC	HD	L
63	100	80	40	ø 11	23	4	12.5	63	ø 7	115	95	140	10	2.5	115	120x120	167	220
71	112	90	45	ø 14	30	5	16	71	ø 7	130	110	160	10	3.5	136	130x130	180	245
80	125	100	50	ø 19	40	6	21.5	80	ø 10	165	130	200	12	3.5	154	145x145	190	265
90S	140	100	56	ø 24	50	8	27	90	ø 10	165	130	200	12	3.5	180	160×160	205	316
90L	140	125	56	ø 24	50	8	27	90	ø 10	165	130	200	12	3.5	180	160×160	205	326

TUNYO

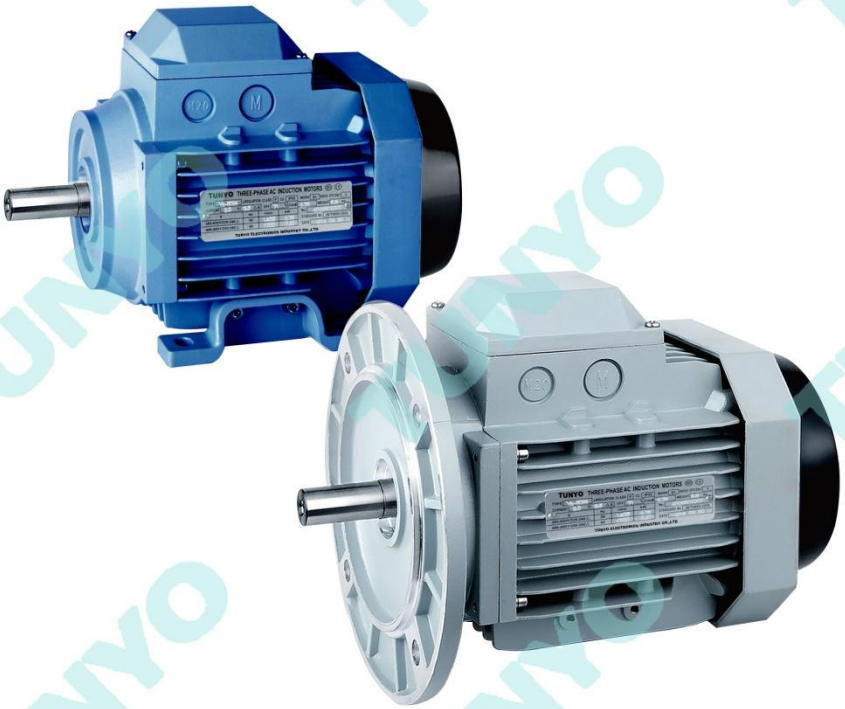

東洋高效電機

TUNYO HIGH EFFICIENCY MOTOR

PROFESSIONAL MANUFACTURER OF POWER TRANSMISSION

DESIGN PHILOSOPHY: To follow the law, but always beyond.

BUSINESS PHILOSOPHY: Design for customer demand , dedication for customer satisfaction

YE2系列技術參數(IE2,3級能效) YE2 series motor technology parameters

3000r/min 380V 50Hz

型号 TYPE	额定功率 RATED OUTPUT		额定转速 RATED SPEED	效率 EFFICENCY	功率因数 POWER FOCTOR	额定电流 RATED CURRENT	额定转矩 RATED TORQUE	堵转转矩 LOCKED ROTOR TORQUE / 额定转矩 RATED TORQUE	最大转矩 MAXIMUM TORQUE / 额定转矩 RATED TORQUE	堵转电流 LOCKED ROTOR CURRENT / 额定电流 RATED CURRENT
	Kw	HP	rpm	η%(IE2)	COSφ	A	Nm	Ts/Tn	Tmax/Tn	Is/In
YE2－801-2	0.75	1	2875	77.4	0.83	1.77	2.49	2.3	2.3	7.0
YE2－802-2	1.1	1.5	2875	79.6	0.84	2.50	3.65	2.2	2.3	7.3
YE2－90S-2	1.5	2	2890	81.3	0.84	3.32	4.96	2.2	2.3	7.6
YE2－90L-2	2.2	3	2890	83.2	0.85	4.72	7.27	2.2	2.3	7.6
YE2－100L-2	3	4	2890	84.6	0.87	6.17	9.91	2.2	2.3	7.8
YE2－112M-2	4	5.5	2910	85.8	0.88	8.04	13.1	2.2	2.3	8.3
YE2－132S1-2	5.5	7.5	2930	87.0	0.86	11.2	17.9	2.0	2.3	8.3
YE2－132S2-2	7.5	10	2840	88.1	0.88	14.6	25.2	2.0	2.3	7.9
YE2－160M1-2	11	15	2930	89.4	0.89	21.0	35.9	2.0	2.3	8.1
YE2－160M2-2	15	20	2930	90.3	0.89	28.4	48.9	2.0	2.3	8.1
YE2－160L-2	18.5	25	2935	90.9	0.89	34.7	60.2	2.0	2.3	8.2
YE2－180M-2	22	30	2940	91.3	0.88	41.6	71.5	2.0	2.3	8.2

1500r/min 380V 50Hz

型号 TYPE	额定功率 RATED OUTPUT		额定转速 RATED SPEED	效率 EFFICENCY	功率因数 POWER FOCTOR	额定电流 RATED CURRENT	额定转矩 RATED TORQUE	堵转转矩 LOCKED ROTOR TORQUE / 额定转矩 RATED TORQUE	最大转矩 MAXIMUM TORQUE / 额定转矩 RATED TORQUE	堵转电流 LOCKED ROTOR CURRENT / 额定电流 RATED CURRENT
	Kw	HP	rpm	η%(IE2)	COSφ	A	Nm	Ts/Tn	Tmax/Tn	Is/In
YE2－802-4	0.75	1	1400	79.6	0.76	1.88	5.12	2.3	2.3	6.6
YE2－90S-4	1.1	1.5	1440	81.4	0.77	2.67	7.30	2.3	2.3	6.8
YE2－90L-4	1.5	2	1440	82.8	0.77	3.57	9.95	2.3	2.3	7.0
YE2－100L1-4	2.2	3	1440	84.3	0.81	4.90	14.6	2.3	2.3	7.6
YE2－100L2-4	3	4	1440	85.5	0.82	6.50	19.9	2.3	2.3	7.6
YE2－112M-4	4	5.5	1440	86.6	0.82	8.56	26.5	2.2	2.3	7.8
YE2－132S-4	5.5	7.5	1450	87.7	0.83	11.5	36.2	2.0	2.3	7.9
YE2－132M-4	7.5	10	1450	88.7	0.84	15.3	49.4	2.0	2.3	7.5
YE2－160M-4	11	15	1460	89.8	0.84	22.2	72.0	2.2	2.3	7.7
YE2－160L-4	15	20	1460	90.6	0.85	29.6	98.1	2.2	2.3	7.8
YE2－180M-4	18.5	25	1470	91.2	0.86	35.8	120.2	2.0	2.3	7.8
YE2－180L-4	22	30	1470	91.6	0.86	42.4	142.9	2.0	2.3	7.8

YE2系列技術參數(IE2,3級能效) YE2 series motor technology parameters

1000r/min 380V 50Hz

型号 TYPE	额定功率 RATED OUTPUT		额定转速 RATED SPEED	效率 EFFICENCY	功率因数 POWER FOCTOR	额定电流 RATED CURRENT	额定转矩 RATED TORQUE	堵转转矩 LOCKED ROTOR TORQUE / 额定转矩 RATED TORQUE	最大转矩 MAXIMUM TORQUE / 额定转矩 RATED TORQUE	堵转电流 LOCKED ROTOR CURRENT / 额定电流 RATED CURRENT
	Kw	HP	rpm	η%(IE2)	COSφ	A	Nm	Ts/Tn	Tmax/Tn	Is/In
YE2－90S-6	0.75	1	930	75.9	0.72	2.09	7.7	2.0	2.1	6.0
YE2－90L-6	1.1	1.5	940	78.1	0.72	2.97	11.2	2.0	2.1	6.0
YE2－100L-6	1.5	2	940	79.8	0.75	3.80	15.2	2.0	2.1	6.5
YE2－112M-6	2.2	3	960	81.8	0.76	5.38	21.9	2.0	2.1	6.6
YE2－132S-6	3	4	960	83.3	0.76	7.20	29.8	2.0	2.1	6.8
YE2－132M1-6	4	5.5	960	84.6	0.76	9.45	39.8	2.0	2.1	6.8
YE2－132M2-6	5.5	7.5	960	86.0	0.77	12.6	54.7	2.0	2.1	7.0
YE2－160M-6	7.5	10	970	87.2	0.78	16.8	73.8	2.0	2.1	7.0
YE2－160L-6	11	15	970	88.7	0.78	24.2	108.3	2.0	2.1	7.2
YE2－180L-6	15	20	970	89.7	0.81	31.4	147.7	2.0	2.1	7.3

YE3系列技術參數(IE3,2級能效) YE3 series motor technology parameters(IE3,LEVEL2)

3000r/min 380V 50Hz

型号 TYPE	额定功率 RATED OUTPUT		额定转速 RATED SPEED	效率 EFFICENCY	功率因数 POWER FOCTOR	额定电流 RATED CURRENT	额定转矩 RATED TORQUE	堵转转矩 LOCKED ROTOR TORQUE / 额定转矩 RATED TORQUE	最大转矩 MAXIMUM TORQUE / 额定转矩 RATED TORQUE	堵转电流 LOCKED ROTOR CURRENT / 额定电流 RATED CURRENT
	Kw	HP	rpm	η%(IE3)	COSφ	A	Nm	Ts/Tn	Tmax/Tn	Is/In
YE3-801-2	0.75	1	2880	80.7	0.82	1.72	2.49	2.3	2.3	7.0
YE3-802-2	1.1	1.5	2880	82.7	0.83	2.43	3.65	2.2	2.3	7.3
YE3-90S-2	1.5	2	2895	84.2	0.84	3.22	4.95	2.2	2.3	7.6
YE3-90L-2	2.2	3	2895	85.9	0.85	4.58	7.26	2.2	2.3	7.6
YE3-100L-2	3	4	2895	87.1	0.87	6.02	9.90	2.2	2.3	7.8
YE3-112M-2	4	5.5	2905	88.1	0.88	7.84	13.1	2.2	2.3	8.3
YE3-132S1-2	5.5	7.5	2930	89.2	0.88	10.6	17.9	2.0	2.3	8.3
YE3-132S2-2	7.5	10	2830	90.1	0.88	14.4	24.4	2.0	2.3	7.9
YE3-160M1-2	11	15	2945	91.2	0.89	20.6	35.7	2.0	2.3	8.1
YE3-160M2-2	15	20	2945	91.9	0.89	27.9	48.6	2.0	2.3	8.1
YE3-160L-2	18.5	25	2940	92.4	0.89	34.2	60.1	2.0	2.3	8.2
YE3-180M-2	22	30	2955	92.7	0.89	40.5	71.1	2.0	2.3	8.2

1500r/min 380V 50Hz

型号 TYPE	额定功率 RATED OUTPUT		额定转速 RATED SPEED	效率 EFFICENCY	功率因数 POWER FOCTOR	额定电流 RATED CURRENT	额定转矩 RATED TORQUE	堵转转矩 LOCKED ROTOR TORQUE / 额定转矩 RATED TORQUE	最大转矩 MAXIMUM TORQUE / 额定转矩 RATED TORQUE	堵转电流 LOCKED ROTOR CURRENT / 额定电流 RATED CURRENT
	Kw	HP	rpm	η%(IE3)	COSφ	A	Nm	Ts/Tn	Tmax/Tn	Is/In
YE3－802-4	0.75	1	1420	82.5	0.75	1.84	5.04	2.3	2.3	6.6
YE3－90S-4	1.1	1.5	1445	84.1	0.76	2.61	7.27	2.3	2.3	6.8
YE3－90L-4	1.5	2	1445	85.3	0.77	3.47	9.91	2.3	2.3	7.0
YE3－100L1-4	2.2	3	1435	86.7	0.81	4.76	14.6	2.3	2.3	7.6
YE3－100L2-4	3	4	1435	87.7	0.82	6.34	20.0	2.3	2.3	7.6
YE3－112M-4	4	5.5	1440	88.6	0.82	8.37	26.5	2.2	2.3	7.8
YE3－132S-4	5.5	7.5	1460	89.6	0.83	11.2	36.0	2.0	2.3	7.9
YE3－132M-4	7.5	10	1460	90.4	0.84	15.0	49.1	2.0	2.3	7.5
YE3－160M-4	11	15	1465	91.4	0.85	21.5	71.7	2.2	2.3	7.7
YE3－160L-4	15	20	1465	92.1	0.86	28.8	97.8	2.2	2.3	7.8
YE3－180M-4	18.5	25	1470	92.6	0.86	35.3	120.2	2.0	2.3	7.8
YE3－180L-4	22	30	1470	93.0	0.86	41.8	142.9	2.0	2.3	7.8

YE3系列技術參數(IE3,2級能效) YE3 series motor technology parameters(IE3,LEVEL2)

1000r/min 380V 50Hz

型号 TYPE	额定功率 RATED OUTPUT		额定转速 RATED SPEED	效率 EFFICENCY	功率因数 POWER FOCTOR	额定电流 RATED CURRENT	额定转矩 RATED TORQUE	堵转转矩 LOCKED ROTOR TORQUE / 额定转矩 RATED TORQUE	最大转矩 MAXIMUM TORQUE / 额定转矩 RATED TORQUE	堵转电流 LOCKED ROTOR CURRENT / 额定电流 RATED CURRENT
	Kw	HP	rpm	η%(IE3)	COSφ	A	Nm	Ts/Tn	Tmax/Tn	Is/In
YE3－90S-6	0.75	1	935	78.9	0.71	2.03	7.66	2.0	2.1	6.0
YE3－90L-6	1.1	1.5	945	81.0	0.73	2.83	11.1	2.0	2.1	6.0
YE3－100L-6	1.5	2	949	82.5	0.73	3.78	15.1	2.0	2.1	6.5
YE3－112M-6	2.2	3	955	84.3	0.74	5.36	22.0	2.0	2.1	6.6
YE3－132S-6	3	4	968	85.6	0.74	7.20	29.6	2.0	2.1	6.8
YE3－132M1-6	4	5.5	968	86.8	0.74	9.46	39.5	2.0	2.1	6.8
YE3－132M2-6	5.5	7.5	968	88.0	0.75	12.7	54.3	2.0	2.1	7.0
YE3－160M-6	7.5	10	970	89.1	0.79	16.2	73.8	2.0	2.1	7.0
YE3－160L-6	11	15	970	90.3	0.80	23.1	108.3	2.0	2.1	6.2
YE3－180L-6	15	20	975	91.2	0.81	30.9	146.9	2.0	2.1	7.3

YE2系列安裝尺寸 YE2 series installation size

◆IM B3 H80–132(YE2)

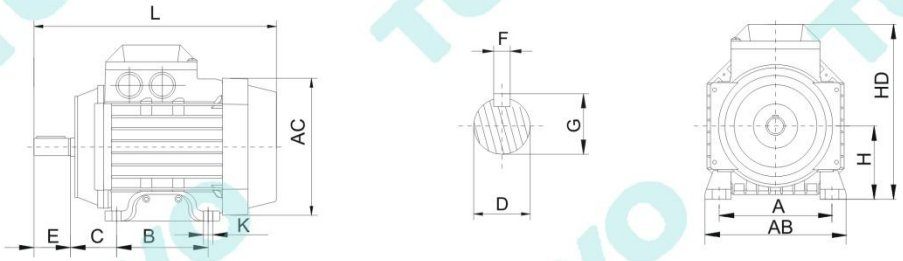

机座号 Frame size	外型及安装尺寸 Installation Dimensions												
	A	B	C	D	E	F	G	H	K	AB	AC	HD	L IE2
80M	125	100	50	ø 19	40	6	21.5	80	ø 10	154	145×145	190	265
90S	140	100	56	ø 24	50	8	27	90	ø 10	180	160×160	205	316
90L	140	125	56	ø 24	50	8	27	90	ø 10	180	160×160	205	316
100L	160	140	63	ø 28	60	8	31	100	ø 12	205	185×185	240	335
112M	190	140	70	ø 28	60	8	31	112	ø 12	235	200×200	270	400
132S	216	140	89	ø 38	80	10	41	132	ø 12	261	245×245	310	470
132M	216	178	89	ø 38	80	10	41	132	ø 12	261	245×245	310	470
160M	254	210	108	ø 42	110	12	45	160	ø 14.5	320	320x320	450	730
160L	254	254	108	ø 42	110	12	45	160	ø 14.5	320	320x320	450	770
180M	279	241	121	ø 48	110	14	51.5	180	ø 14.5	355	360x360	500	790
180L	279	279	121	ø 48	110	14	51.5	180	ø 14.5	355	360x360	500	930

YE2系列安装尺寸 YE2 series installation size

◆IM B14 H80-112(YE2)

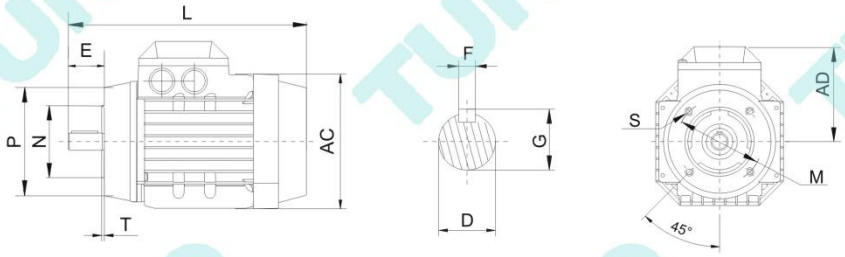

机座号 Frame size	外型及安装尺寸 Installation Dimensions											
	D	E	F	G	M	N	P	S	T	AC	AD	L IE2
80M	ø19	40	6	21.5	100	80	110	M6	3.0	145×145	115	265
90S	ø24	50	8	27	115	95	120	M8	3.0	160×160	122	316
90L	ø24	50	8	27	115	95	120	M8	3.0	160×160	122	326
100L	ø28	60	8	31	130	110	155	M8	3.5	185×185	137	365
112M	ø28	60	8	31	130	110	160	M8	3.5	200×200	155	400

◆IM B34 H80-132(YE2)

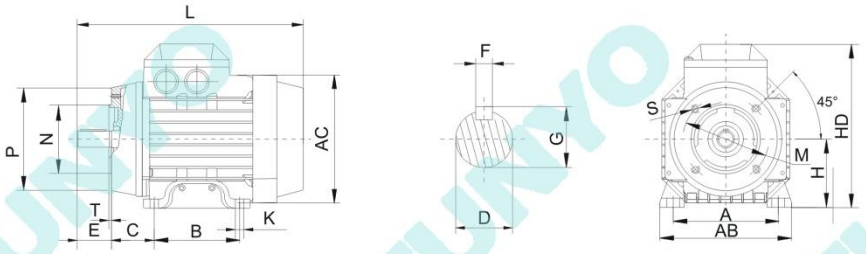

机座号 Frame size	外型及安装尺寸 Installation Dimensions																	
	A	B	C	D	E	F	G	H	K	M	N	P	S	T	AB	AC	HD	L IE2
80M	125	100	50	ø19	40	6	21.5	80	ø10	100	80	110	M6	3.0	154	145×145	190	265
90S	140	100	56	ø24	50	8	27	90	ø10	115	95	120	M8	3.0	180	160×160	205	316
90L	140	125	56	ø24	50	8	27	90	ø10	115	95	120	M8	3.0	180	160×160	205	326
100L	160	140	63	ø28	60	8	31	100	ø12	130	110	155	M8	3.5	205	185×185	240	335
112M	190	140	70	ø28	60	8	31	112	ø12	130	110	160	M8	3.5	235	200×200	270	400

YE2 系列安裝尺寸 YE2 series installation size

◆IM B5 H80–180(YE2)

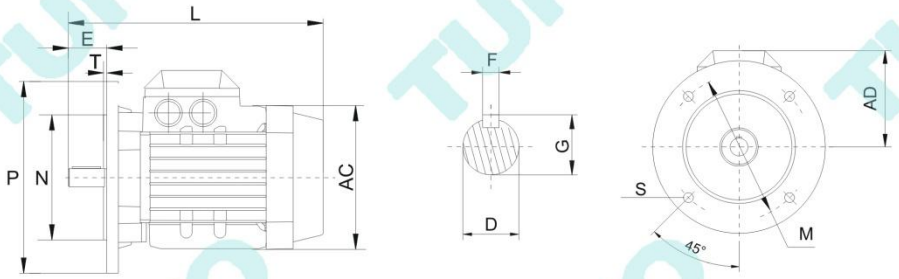

机座号 Frame size	外型及安装尺寸 Installation Dimensions											
	D	E	F	G	M	N	P	S	T	AC	AD	L IE2
80M	ø19	40	6	21.5	165	130	200	12	3.5	145×145	115	265
90S	ø24	50	8	27	165	130	200	12	3.5	160×160	122	316
90L	ø24	50	8	27	165	130	200	12	3.5	160×160	122	326
100L	ø28	60	8	31	215	180	250	14.5	4	185×185	137	365
112M	ø28	60	8	31	215	180	250	14.5	4	200×200	155	400
132S	ø38	80	10	41	265	230	300	14.5	4	245×245	180	470
132M	ø38	80	10	41	265	230	300	14.5	4	245×245	180	470
160M	ø42	110	12	45	300	250	350	18.5	5	320x320	290	730
160L	ø42	110	12	45	300	250	350	18.5	5	320x320	290	770
180M	ø48	110	14	51.5	300	250	350	18.5	5	360x360	320	790
180L	ø48	110	14	51.5	300	250	350	18.5	5	360x360	320	930

YE2系列安裝尺寸 YE2 series installation size

◆IM B35 H80–180(YE2)

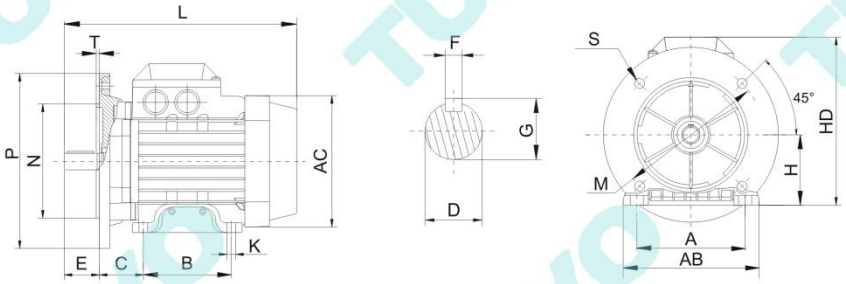

机座号 Frame size	外型及安装尺寸 Installation Dimensions																	
	A	B	C	D	E	F	G	H	K	M	N	P	S	T	AB	AC	HD	L IE2
80M	125	100	50	ø19	40	6	21.5	80	ø10	165	130	200	12	3.5	154	145×145	190	265
90S	140	100	56	ø24	50	8	27	90	ø10	165	130	200	12	3.5	180	160×160	205	316
90L	140	125	56	ø24	50	8	27	90	ø10	165	130	200	12	3.5	180	160×160	205	326
100L	160	140	63	ø28	60	8	31	100	ø12	215	180	250	14.5	4	205	185×185	240	335
112M	190	140	70	ø28	60	8	31	112	ø12	215	180	250	14.5	4	235	200×200	270	400
132S	216	140	89	ø38	80	10	41	132	ø12	265	230	300	14.5	4	261	245×245	310	470
132M	216	178	89	ø38	80	10	41	132	ø12	265	230	300	14.5	4	261	245×245	310	470
160M	254	210	108	ø42	110	12	45	160	ø14.5	300	250	350	18.5	5	320	320X320	450	730
160L	254	254	108	ø42	110	12	45	160	ø14.5	300	250	350	18.5	5	320	320X320	450	770
180M	279	241	121	ø48	110	14	51.5	180	ø14.5	300	250	350	18.5	5	355	360X360	500	790
180L	279	279	121	ø48	110	14	51.5	180	ø14.4	300	250	350	18.5	5	355	360X360	500	930

YE3系列安裝尺寸 YE3 series installation size

◆IM B3 H80–132(YE3)

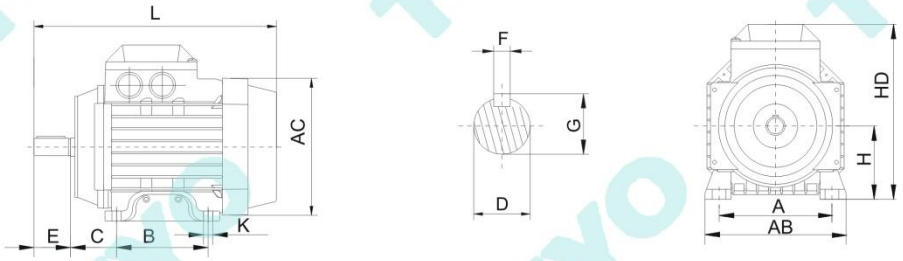

机座号 Frame size	外型及安装尺寸 Installation Dimensions												
	A	B	C	D	E	F	G	H	K	AB	AC	HD	L IE3
80M	125	100	50	ø 19	40	6	21.5	80	ø 10	154	145×145	190	305
90S	140	100	56	ø 24	50	8	27	90	ø 10	180	160×160	205	340
90L	140	125	56	ø 24	50	8	27	90	ø 10	180	160×160	205	365
100L	160	140	63	ø 28	60	8	31	100	ø 12	205	185×185	240	405
112M	190	140	70	ø 28	60	8	31	112	ø 12	235	200×200	270	455
132S	216	140	89	ø 38	80	10	41	132	ø 12	261	245×245	310	470
132M	216	178	89	ø 38	80	10	41	132	ø 12	261	245×245	310	510
160M	254	210	108	ø 42	110	12	45	160	ø 14.5	320	320x320	450	730
160L	254	254	108	ø 42	110	12	45	160	ø 14.5	320	320x320	450	770
180M	279	241	121	ø 48	110	14	51.5	180	ø 14.5	355	360x360	500	790
180L	279	279	121	ø 48	110	14	51.5	180	ø 14.5	355	360x360	500	930

YE3系列安裝尺寸 YE3 series installation size

◆IM B14 H80-112(YE3)

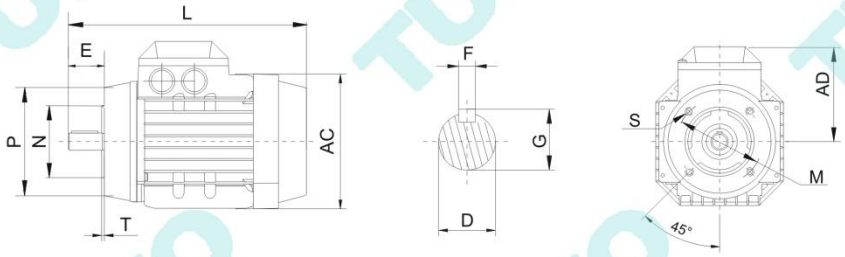

机座号 Frame size	外型及安装尺寸 Installation Dimensions											
	D	E	F	G	M	N	P	S	T	AC	AD	L IE3
80M	ø19	40	6	21.5	100	80	110	M6	3.0	145×145	115	305
90S	ø24	50	8	27	115	95	120	M8	3.0	160×160	122	340
90L	ø24	50	8	27	115	95	120	M8	3.0	160×160	122	365
100L	ø28	60	8	31	130	110	155	M8	3.5	185×185	137	405
112M	ø28	60	8	31	130	110	160	M8	3.5	200×200	155	455

◆IM B34 H80-132(YE3)

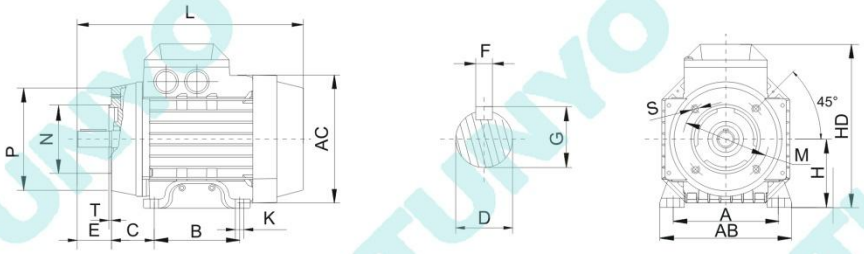

机座号 Frame size	外型及安装尺寸 Installation Dimensions																	
	A	B	C	D	E	F	G	H	K	M	N	P	S	T	AB	AC	HD	L IE3
80M	125	100	50	ø19	40	6	21.5	80	ø10	100	80	110	M6	3.0	154	145×145	190	305
90S	140	100	56	ø24	50	8	27	90	ø10	115	95	120	M8	3.0	180	160×160	205	340
90L	140	125	56	ø24	50	8	27	90	ø10	115	95	120	M8	3.0	180	160×160	205	365
100L	160	140	63	ø28	60	8	31	100	ø12	130	110	155	M8	3.5	205	185×185	240	405
112M	190	140	70	ø28	60	8	31	112	ø12	130	110	160	M8	3.5	235	200×200	270	455

YE3系列安裝尺寸 YE3 series installation size

◆IM B5 H80–180(YE3)

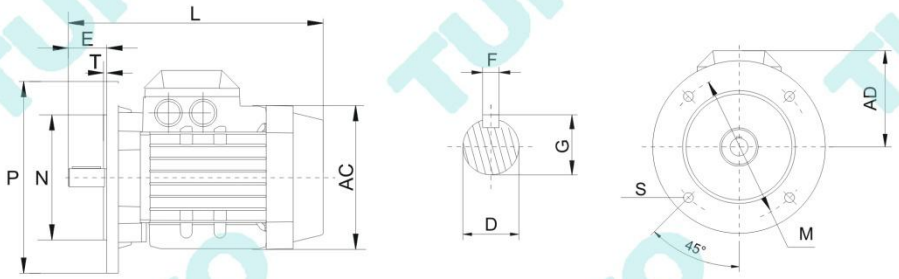

机座号 Frame size	外型及安装尺寸 Installation Dimensions											
	D	E	F	G	M	N	P	S	T	AC	AD	L
												IE3
80M	ø19	40	6	21.5	165	130	200	12	3.5	145×145	115	305
90S	ø24	50	8	27	165	130	200	12	3.5	160×160	122	340
90L	ø24	50	8	27	165	130	200	12	3.5	160×160	122	365
100L	ø28	60	8	31	215	180	250	14.5	4	185×185	137	405
112M	ø28	60	8	31	215	180	250	14.5	4	200×200	155	455
132S	ø38	80	10	41	265	230	300	14.5	4	245×245	180	470
132M	ø38	80	10	41	265	230	300	14.5	4	245×245	180	510
160M	ø42	110	12	45	300	250	350	18.5	5	320x320	290	730
160L	ø42	110	12	45	300	250	350	18.5	5	320x320	290	770
180M	ø48	110	14	51.5	300	250	350	18.5	5	360x360	320	790
180L	ø48	110	14	51.5	300	250	350	18.5	5	360x360	320	930

YE3系列安裝尺寸 YE3 series installation size

◆IM B35 H80–180(YE3)

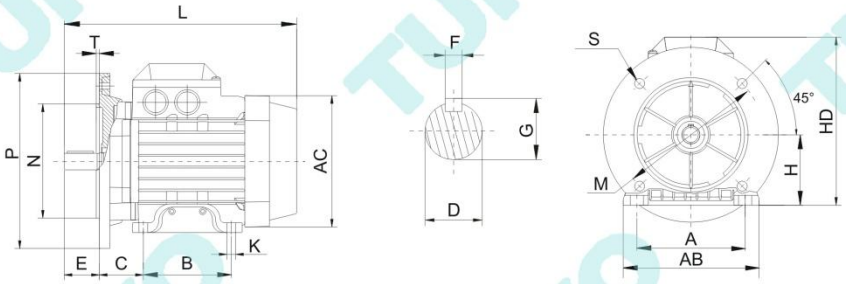

机座号 Frame size	外型及安装尺寸 Installation Dimensions																	
	A	B	C	D	E	F	G	H	K	M	N	P	S	T	AB	AC	HD	L IE3
80M	125	100	50	ø19	40	6	21.5	80	ø10	165	130	200	12	3.5	154	145×145	190	305
90S	140	100	56	ø24	50	8	27	90	ø10	165	130	200	12	3.5	180	160×160	205	340
90L	140	125	56	ø24	50	8	27	90	ø10	165	130	200	12	3.5	180	160×160	205	365
100L	160	140	63	ø28	60	8	31	100	ø12	215	180	250	14.5	4	205	185×185	240	405
112M	190	140	70	ø28	60	8	31	112	ø12	215	180	250	14.5	4	235	200×200	270	455
132S	216	140	89	ø38	80	10	41	132	ø12	265	230	300	14.5	4	261	245×245	310	470
132M	216	178	89	ø38	80	10	41	132	ø12	265	230	300	14.5	4	261	245×245	310	510
160M	254	210	108	ø42	110	12	45	160	ø14.5	300	250	350	18.5	5	320	320X320	450	730
160L	254	254	108	ø42	110	12	45	160	ø14.5	300	250	350	18.5	5	320	320X320	450	770
180M	279	241	121	ø48	110	14	51.5	180	ø14.5	300	250	350	18.5	5	355	360X360	500	790
180L	279	279	121	ø48	110	14	51.5	180	ø14.4	300	250	350	18.5	5	355	360X360	500	930

TUNYO

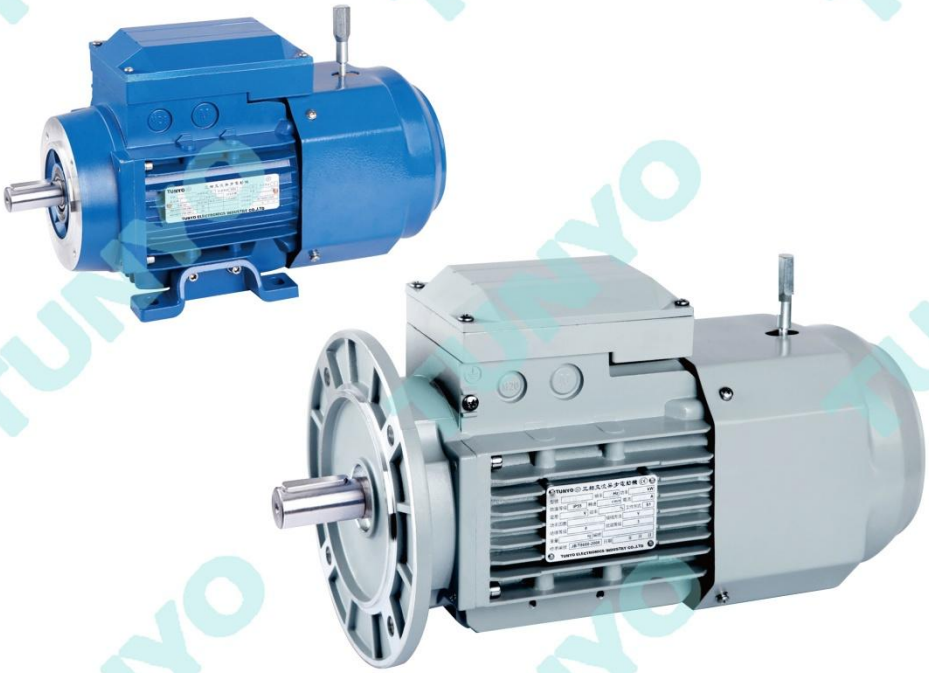

東洋制動電機

TUNYO BRAKE MOTOR

PROFESSIONAL MANUFACTURER OF POWER TRANSMISSION

DESIGN PHILOSOPHY: To follow the law, but always beyond.

BUSINESS PHILOSOPHY: Design for customer demand , dedication for customer satisfaction

YEJ制動電機 YEJ brake motor

制动电机是由三相异步电动机和制动器两部分组成,是三相异步电动机的派生系列。制动器分为手动释放和螺栓释放两种形式。制动器是制动电机的主要部件。其工作电源分为两类;一类是交流制动;另一类是直流制动.目前我公司生产的制动电机均为直流制动电机,其优点是制动力矩大、安装调试方便、制动响应速度快、可靠性高、通用性强等优点。

Brake motor is made of two parts consisting of three-phase asynchronous motors and brakes, its belongs to three-phase asynchronous motor derived series. Manual brake release and bolt release are two forms of brakes. Brakes are the main components of the brake motor. Its working power divided into two categories; One is AC brake, the other is DC braking, my company produces brake motors are DC brake motors, the advantage of the braking torque is below,Easy installation, braking response speed, high reliability, versatility and other advantages.

YEJ制動電機工作原理 Operating princliple

在电机的后端盖装有一个石棉耐磨材料的摩擦盘和励磁线圈。当电机失电后摩擦盘被制动器弹簧通过一块压紧板，紧紧地压在电机后端盖已加工的平面上，从而使制动盘产生强大的摩擦力矩，达到制动的目的。当励磁线圈通电后产生电磁吸力，将弹簧压紧板吸合，压紧板离开摩擦盘。使摩擦盘释放，电动机灵活转动，根据电动机功率不同，线圈电阻在几十至几百欧之间。

After the motor is equipped with a cover asbestos friction disc wear-resistant materials and excitation coil. When the motor is energized by a spring brake friction disc is a pressing plate, pressing firmly on the plane after the motor cover has been processed, so that the brake disc friction torque generated strong achieve braking purposes. When the excitation coil is energized to produce electromagnetic suction, pull the spring-loadedplate, pressed board leave the friction plate. The friction disc is released, the motor flexible rotation, depending on the motor power between tens to hundreds of European coil resistance.

直流制动器不能直接接在交流电源上，在制动吸盘上装有绕组线圈，绕组的额定电压为低压直流电压。工作时必须由单相交流电源经整流后供给吸盘绕组，因此制动电机接线盒内同时装有整流器，接线方法在第29页图5。

The DC brake can not be directly connected to the AC power to the brake coil is provided with suction cups for low-voltage winding rated DC voltage. A single-phase AC power is rectified then supply to a sucker winding to make it work, so the brake motor terminal box fitted with a rectifier, wiring diagram below.

制動時間 The brake time

制动电机的制动时间(t)是从电机和制动器停止供电瞬间开始到轴完全停止时所有用的时间，一般情况下，63~80机座号的电机其制动时间为0.5秒钟，90~132机座号的电机其制动时间为1秒钟，160~180机座号的电机其制动时间为2秒钟。

Brake motor braking time (t) is the time from the motor and brake stopping the power to the shaft completely stopped, under normal circumstances,For 63 to 80 frame size motor, the braking time is 0.5 seconds, For 90 ~ 132 frame size motor ,the braking time is 1 second, For 160 to 180 frame size motor ,the braking time is 2 seconds.

制動電機的調整與維修 Adjustment and maintenance

在制动电机使用过程中随着制动次数的增加,摩擦盘会有磨损情况存在,因此摩擦盘与电机后盖的间隙也随之增大。对长期运转的电机，间隙的改变直接影响电机的制动力矩。

间隙在调整时不能过小，间隙过小，摩擦盘与电机后盖摩擦平面不能完全分离而烧毁电机，间隙过大，压紧板不能吸合或吸合过程中产生强烈的噪声。制动压紧板与电磁吸盘的间隙按制动器而定，一般63~112机座号的电机其制动器间隙在0.25mm~0.30mm，132~180机座号的电机制动器间隙在0.50mm~0.80mm。

In the course of braking the motor increases the number of brake friction disc wear condition will exist, so a gap of the motor cover plate of the friction increases. Changes to the long-term operation of the motor, the motor directly affects the gap between the braking torque. When adjusting the gap is not too small, the gap is too small, the friction disc friction with the motor cover can not be completely separated from the plane and burned the motor, the gap is too large, pressed board can not pull or pull a strong noise process. Brake pressing plate at the gap magnechuck brakes, generally for 63 to 112 frame size motor, the brake gap between 0.25mm to 0.30mm,for 132 ~ 180 frame size motor, the brake gap between 0.50mm to 0.80mm .

制動電機的變頻運行 The inverter runs the motor brake

随着社会生产率的不断发展和科学技术的不断提升。制动加变频方式在执行机构中得到了广泛的应用。我公司生产的所有异步电动机都能配置变频器运行。此时，制动器必须单独提供稳定的工作电源，不能与电机上的电源线端子并接共用。否则制动器无法正常工作。需要提出的是：制动器电机配变频操作时，要附加一个轴流风扇，此风扇也只能独立控制和供电。

值得注意的是，我公司生产的所有异步电动机最高频率范围在60Hz，如用户有特殊要求可向公司提出。

With the continuous improvement and continuous development of the social productivity of science and technology. Brake plus inverter system has been widely applied in the implementation of the organization. I produced all asynchronous motors can configure the drive to run. At this point the brake must be provided separately stable power supply, and then can not be shared with the power terminals on the motor. Otherwise the brakes do not work properly. Need to make is brake motors with variable frequency operation, an axial flow fan to attach this fan only independent control and power.

Notably, the company produces all kinds of asynchronous motor in the highest frequency range 60Hz, as you may have special requirements please let us know.

YEJ 制動電機接綫方法 YEJ wiring brake motor method

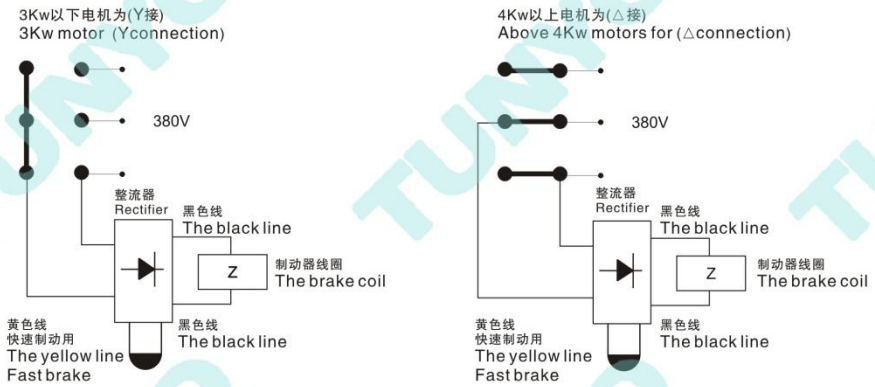

客户如有其他要求，可按订单制作

图5/Figure5

YEJ制動電機代號説明 YEJ brake motor code description

YEJ – 80M – 2 – 4 – B5

- B5 — 电机安装方式 Motor mounting modality
- 4 — 极数 Number of poles
- 2 — 铁芯代号 Core longth number
- 80M — 机座号 Frame size
- YEJ — 系列代码 Series code

YEJ系列技術參數 YEJ series of technical parameters

3000r/min 380V 50Hz

型号 Type	额定功率 RATED OUTPUT	额定转速 RATED SPEED	效率 EFFICENCY	功率因数 POWER FOCTOR	额定电流 RATED CURRENT	额定转矩 RATED TORQUE	堵转转矩 LOCKED ROTOR TORQUE / 额定转矩 RATED TORQUE	最大转矩 MAXIMUM TORQUE / 额定转矩 RATED TORQUE	静制动力矩 STATIC BRAKE TORQUE NM 直流 DC	控制制动时间 BRAKE TORQUEDU RING IDIE
	KW	rpm	η%	COS φ	A	Nm	Ts/Tn	Tmax/Tn		s
YEJ－631-2	0.18	2800	65.0	0.80	0.53	0.61	2.2	2.2	3.5	0.10
YEJ－632-2	0.25	2800	68.0	0.81	0.69	0.85	2.2	2.2	3.5	0.10
YEJ－711-2	0.37	2830	70.0	0.81	0.99	1.25	2.2	2.2	4.0	0.10
YEJ－712-2	0.55	2830	73.0	0.82	1.40	1.86	2.2	2.3	4.0	0.10
YEJ－801-2	0.75	2840	75.0	0.83	1.83	2.52	2.2	2.3	7.5	0.10
YEJ－802-2	1.1	2840	77.0	0.84	2.55	3.70	2.2	2.3	7.5	0.10
YEJ－90S-2	1.5	2840	79.0	0.84	3.39	5.04	2.2	2.3	15	0.15
YEJ－90L-2	2.2	2840	81.0	0.85	4.80	7.40	2.2	2.3	15	0.15
YEJ－100L-2	3	2860	83.0	0.87	6.31	10.0	2.2	2.3	30	0.15
YEJ－112M-2	4	2880	85.0	0.88	8.22	13.3	2.2	2.3	40	0.15
YEJ－132S1-2	5.5	2910	86.0	0.88	11.2	18.0	2.2	2.3	80	0.15
YEJ－132S2-2	7.5	2910	87.0	0.88	15.1	24.6	2.2	2.3	80	0.15
YEJ－160M1-2	11	2930	88.0	0.89	21.3	35.9	2.2	2.3	150	0.30
YEJ－160M2-2	15	2930	89.0	0.89	28.8	48.9	2.2	2.3	150	0.30
YEJ－160L-2	18.5	2935	90.0	0.90	34.7	60.2	2.2	2.3	150	0.30
YEJ－180M-2	22	2935	90.0	0.90	41.3	71.6	2.0	2.3	200	0.30

YEJ系列技術參數 YEJ series of technical paeameters

1500r/min 380V 50Hz

型号 Type	额定功率 RATED OUTPUT	额定转速 RATED SPEED	效率 EFFICENCY	功率因数 POWER FOCTOR	额定电流 RATED CURRENT	额定转矩 RATED TORQUE	堵转转矩 LOCKED ROTOR TORQUE / 额定转矩 RATED TORQUE	最大转矩 MAXIMUM TORQUE / 额定转矩 RATED TORQUE	静制动力矩 STATIC BRAKE TORQUE NM 直流 DC	空载制动时间 BRAKE TORQUEDU RING IDIE
	KW	rpm	η%	COS φ	A	Nm	Ts/Tn	Tmax/Tn		s
YEJ－631-4	0.12	1360	57.0	0.72	0.44	0.84	2.2	2.0	3.5	0.10
YEJ－632-4	0.18	1360	60.0	0.73	0.62	1.26	2.2	2.0	3.5	0.10
YEJ－711-4	0.25	1375	65.0	0.74	0.79	1.74	2.2	2.0	4.0	0.10
YEJ－712-4	0.37	1375	67.0	0.75	1.12	2.57	2.2	2.0	4.0	0.10
YEJ－801-4	0.55	1405	71.0	0.75	1.57	3.74	2.2	2.4	7.5	0.10
YEJ－802-4	0.75	1405	73.0	0.76	2.02	5.10	2.2	2.4	7.5	0.10
YEJ－90S-4	1.1	1445	75.0	0.77	2.82	7.27	2.2	2.3	15	0.15
YEJ－90L-4	1.5	1445	78.0	0.79	3.70	9.91	2.2	2.3	15	0.15
YEJ－100L1-4	2.2	1440	80.0	0.81	5.16	14.6	2.2	2.3	30	0.15
YEJ－100L2-4	3	1440	82.0	0.82	6.78	19.9	2.2	2.3	30	0.15
YEJ－112M-4	4	1440	84.0	0.82	8.82	26.5	2.2	2.3	40	0.15
YEJ－132S1-4	5.5	1440	85.0	0.83	11.7	36.5	2.2	2.3	80	0.15
YEJ－132S2-4	7.5	1440	87.0	0.84	15.6	49.7	2.2	2.3	80	0.15
YEJ－160M1-4	11	1450	88.0	0.85	21.3	72.4	2.2	2.2	150	0.30
YEJ－160M2-4	15	1450	89.0	0.85	30.1	98.8	2.2	2.2	150	0.30
YEJ－180M-4	18.5	1455	90.5	0.86	36.5	121.4	2.2	2.2	150	0.30
YEJ－180L-4	22	1455	91.0	0.86	43.1	144.4	2.0	2.2	200	0.30

1000r/min 380V 50Hz

YEJ－711-6	0.18	900	56.0	0.66	0.71	19.1	1.9	2.0	4.0	0.10
YEJ－712-6	0.25	900	59.0	0.68	0.95	2.65	1.9	2.0	4.0	0.10
YEJ－801-6	0.37	910	62.0	0.70	1.30	3.88	1.9	2.0	7.5	0.10
YEJ－802-6	0.55	910	65.0	0.72	1.79	5.77	1.9	2.1	7.5	0.10
YEJ－90S-6	0.75	930	69.0	0.72	2.26	7.7	2.1	2.1	15	0.15
YEJ－90L-6	1.1	940	72.0	0.73	3.14	11.2	2.1	2.1	15	0.15
YEJ－100L-6	1.5	940	76.0	0.76	3.95	15.2	2.2	2.1	30	0.15
YEJ－112M-6	2.2	960	79.0	0.76	5.57	21.9	2.2	2.1	40	0.15
YEJ－132S-6	3	960	81.0	0.76	7.40	29.8	2.2	2.1	80	0.15
YEJ－132M1-6	4	960	82.0	0.76	9.63	39.8	2.2	2.1	80	0.15
YEJ－132M2-6	5.5	960	84.0	0.77	12.9	54.7	2.2	2.1	150	0.30
YEJ－160M-6	7.5	970	86.0	0.77	17.0	73.8	1.8	2.1	150	0.30
YEJ－160L-6	11	970	87.5	0.78	24.3	108.3	1.9	2.1	150	0.30
YEJ－180L-6	15	970	89.0	0.81	31.6	147.7	2.1	2.1	200	0.30

YEJ系列安裝尺寸 YEJ series installation size

◆ IM B3 H63–180

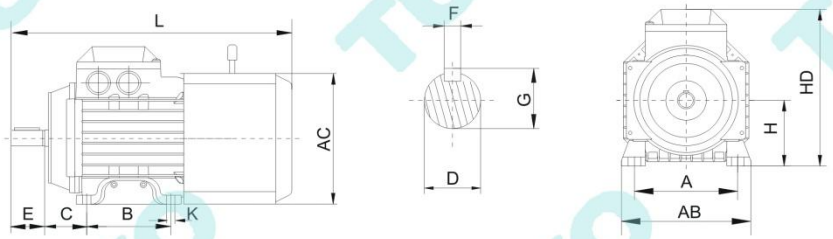

机座号 Frame size	外型及安装尺寸 Installation Dimensions												
	A	B	C	D	E	F	G	H	K	AB	AC	HD	L
63	100	80	40	ø 11	23	4	12.5	63	ø 7	135	120X120	167	255
71	112	90	45	ø 14	30	5	16	71	ø 7	137	130X130	178	305
80M	125	100	50	ø 19	40	6	21.5	80	ø 10	155	145X145	190	340
90S	140	100	56	ø 24	50	8	27	90	ø 10	175	160X160	205	400
90L	140	125	56	ø 24	50	8	27	90	ø 10	175	160X160	205	400
100L	160	140	63	ø 28	60	8	31	100	ø 12	200	185X185	240	440
112M	190	140	70	ø 28	60	8	31	112	ø 12	230	200X200	270	480
132S	216	140	89	ø 38	80	10	41	132	ø 12	270	245X245	315	567
132M	216	178	89	ø 38	80	10	41	132	ø 12	270	245X245	315	567
160M	254	210	108	ø 42	110	12	45	160	ø 14.5	320	335X335	450	780
160L	254	254	108	ø 42	110	12	45	160	ø 14.5	320	335X335	450	780
180M	279	241	121	ø 48	110	14	51.5	180	ø 14.5	355	370X370	500	880
180L	279	279	121	ø 48	110	14	51.5	180	ø 14.5	355	370X370	500	880

YEJ系列安裝尺寸 YEJ series installation size

◆ IM B14 H63–112

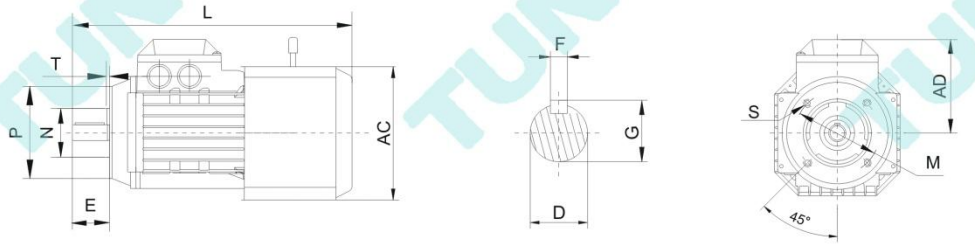

机座号 Frame size	外型及安装尺寸 Installation Dimensions											
	D	E	F	G	M	N	P	S	T	AC	AD	L
63	ø11	23	4	12.5	75	60	90	M5	2.5	120×120	104	255
71	ø14	30	5	16	85	70	105	M6	2.5	130X130	107	305
80	ø19	40	6	21.5	100	80	110	M6	3.0	145×145	115	340
90S	ø24	50	8	27	115	95	120	M8	3.0	160×160	122	400
90L	ø24	50	8	27	115	95	120	M8	3.0	160×160	122	400
100L	ø28	60	8	31	130	110	155	M8	3.5	185X185	137	440
112M	ø28	60	8	31	130	110	160	M8	3.5	200X200	155	480

◆ IM B34 H63–112

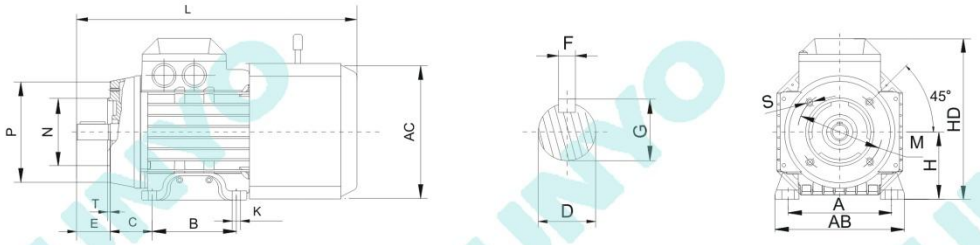

机座号 Frame size	外型及安装尺寸 Installation Dimensions																	
	A	B	C	D	E	F	G	H	K	M	N	P	S	T	AB	AC	HD	L
63	100	80	40	ø11	23	4	12.5	63	ø7	75	60	90	M5	2.5	135	120×120	167	255
71	112	90	45	ø14	30	5	16	71	ø7	85	70	105	M6	2.5	137	130X130	180	305
80	125	100	50	ø19	40	6	21.5	80	ø10	100	80	110	M6	3.0	155	145×145	190	340
90S	140	100	56	ø24	50	8	27	90	ø10	115	95	120	M8	3.0	175	160×160	205	400
90L	140	125	56	ø24	50	8	27	90	ø10	115	95	120	M8	3.0	175	160×160	205	400
100L	160	140	63	ø28	60	8	31	100	ø12	130	110	155	M8	3.5	200	185X185	240	440
112M	190	140	70	ø28	60	8	31	112	ø12	130	110	160	M8	3.5	230	200X200	270	480

YEJ系列安裝尺寸 YEJ series installation size

◆ IM B5 H63–180

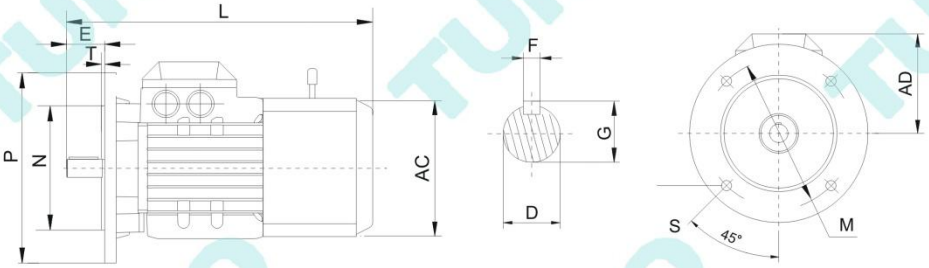

机座号 Frame size	外型及安装尺寸 Installation Dimensions											
	D	E	F	G	M	N	P	S	T	AC	AD	L
63	ø11	23	4	12.5	115	95	140	10	3.0	120×120	104	255
71	ø14	30	5	16	130	110	160	10	3.0	130×130	107	305
80M	ø19	40	6	21.5	165	130	200	12	3.5	145×145	115	340
90S	ø24	50	8	27	165	130	200	12	3.5	160×160	122	400
90L	ø24	50	8	27	165	130	200	12	3.5	160×160	122	400
100L	ø28	60	8	31	215	180	250	14.5	4	185×185	137	440
112M	ø28	60	8	31	215	180	250	14.5	4	200×200	155	480
132S	ø38	80	10	41	265	230	300	14.5	4	245×245	180	567
132M	ø38	80	10	41	265	230	300	14.5	4	245×245	180	567
160M	ø42	110	12	45	300	250	350	18.5	5	320×320	290	780
160L	ø42	110	12	45	300	250	350	18.5	5	320×320	290	780
180M	ø48	110	14	51.5	300	250	350	18.5	5	360×360	340	880
180L	ø48	110	14	51.5	300	250	350	18.5	5	360×360	340	880

YEJ系列安裝尺寸 YEJ series installation size

◆ IM B35 H63–180

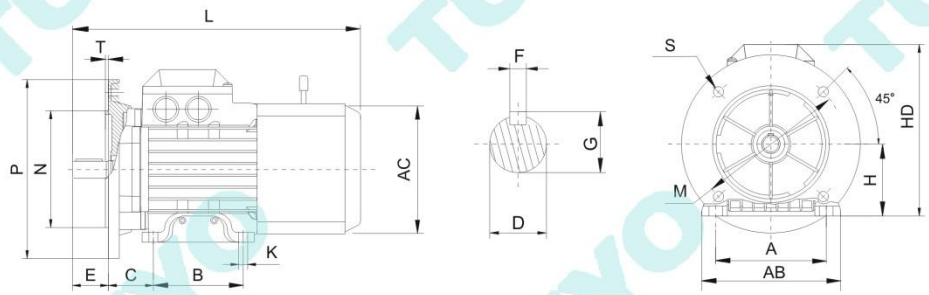

机座号 Frame size	外型及安装尺寸 Installation Dimensions																	
	A	B	C	D	E	F	G	H	K	M	N	P	S	T	AB	AC	HD	L
63	100	80	40	ø11	23	4	12.5	63	ø7	115	95	140	10	2.5	115	120×120	167	255
71	112	90	45	ø14	30	5	16	71	ø7	130	110	160	10	3.5	136	130×130	178	305
80M	125	100	50	ø19	40	6	21.5	80	ø10	165	130	200	12	3.5	154	145×145	192	340
90S	140	100	56	ø24	50	8	27	90	ø10	165	130	200	12	3.5	180	160×160	205	400
90L	140	125	56	ø24	50	8	27	90	ø10	165	130	200	12	3.5	180	160×160	205	400
100L	160	140	63	ø28	60	8	31	100	ø12	215	180	250	14.5	4	205	185×185	240	440
112M	190	140	70	ø28	60	8	31	112	ø12	215	180	250	14.5	4	235	200×200	270	480
132S	216	140	89	ø38	80	10	41	132	ø12	265	230	300	14.5	4	261	245×245	310	567
132M	216	178	89	ø38	80	10	41	132	ø12	265	230	300	14.5	4	261	245×245	310	567
160M	254	210	108	ø42	110	12	45	160	ø14.5	300	250	350	18.5	5	320	335×335	450	780
160L	254	254	108	ø42	110	12	45	160	ø14.5	300	250	350	18.5	5	320	335×335	450	780
180M	279	241	121	ø48	110	14	51.5	180	ø14.5	300	250	350	18.5	5	355	370×370	500	880
180L	279	279	121	ø48	110	14	51.5	180	ø14.5	300	250	350	18.5	5	355	370×370	500	880

TUNYO

東洋變頻電機

TUNYO FREQUENCY CONVERSION MOTOR

PROFESSIONAL MANUFACTURER OF POWER TRANSMISSION

DESIGN PHILOSOPHY: To follow the law, but always beyond.

BUSINESS PHILOSOPHY: Design for customer demand , dedication for customer satisfaction

三相電機的變頻調速概述 Overview of the three-phase inverter motor

变频调速目前已经成为主流的调速方式，可广泛应用于各行各业无级变速传动。

VVVF speed has become the popular way, can be widely used in various industries continuously variable transmission.

在变频电机调速控制系统中，采用电力电子变频器作为供电电源，它不可避免的会有高次谐波分量，谐波对电机的影响较大。主要体现在磁路中谐波磁势和电路中的谐波电流上。不同振幅和频率的电流和磁通谐波将引起电动机定子铜耗转子铝耗。这些损耗使电动机效率、功率因数降低，这些损耗绝大部分转变成热能，引起电动机附加发热，导致电动机温升增加，其温升一般要增加10～20%。由于采用变频器供电，传导和辐射的电磁干扰，定子绕组中绝缘老化，共模电压导致加速轴承的恶化和泄漏电流，轴承易坏，同时电动机发出尖叫声。由于谐波磁动势与转子谐波电流合成后产生恒定的谐波电磁转矩和振动的谐波电磁转矩。这些转矩会使电动机发出的转矩产生脉动，从而使电动机转速低时发生振动。

In the variable frequency motor speed control system, using power electronic inverter as a power supply, it is inevitable that there will be high harmonics, harmonic greater impact on the motor. Mainly reflected in the magnetic circuit and the circuit harmonic magnetic potential harmonic currents. Different amplitudes and frequencies of harmonic currents and magnetic flux will cause the motor stator copper loss rotor aluminum consumption. These losses of the motor efficiency and power factor reduction, the majority of these losses into heat, causing additional heating of the motor, causing the motor temperature increases, the increase in temperature generally 10 ~ 20%. As a result of electromagnetic interference power, conduction and radiation, the stator winding insulation aging, resulting in deterioration of the common-mode voltage and leakage current of accelerated bearing, bearing perishable, while the motor screaming. Since harmonic electromagnetic torque constant harmonic electromagnetic torque and vibration harmonic MMFs and rear rotor harmonic current synthesis. The torque of the motor torque will generate pulsating issued, so that the motor speed vibration is low.

本公司生产的YS、YE2、YE3系列通用三相异步电动机在设计上，我们主要考虑的是电动机的过载能力、起动性能、效率和功率因数。另外主要考虑电动机对非正弦电源的适应能力。抑制电流中的高次谐波对电动机的影响。由于电动机在低频区工作时温升的升高，绝缘等级采用F级以上，采用高分子绝缘材料及真空压力浸漆工艺，以及采用特殊的绝缘结构。为了降低电磁转矩的脉动，提高机械零部件的加工精度，提高平恒质量，采用高精度静音轴承。为了消除电机振动，对电动机整体结构进行了加强设计。

The company produces YS, YE2, YE3 Series Universal three-phase asynchronous motor design, our main consideration is the motor overload, starting performance, efficiency and power factor. Another major consideration for non-sinusoidal motor power adaptability. Suppress the influence of higher harmonic current to the motor. Since the motor is increased when the working temperature of the low-frequency region, class F insulation class above, the use of polymer insulation materials and vacuum pressure impregnation process, and the use of special insulation structure. In order to reduce the electromagnetic torque ripple, improve the precision mechanical parts to improve the quality level constant, high-precision bearing mute. In order to eliminate vibration motor, the motor structure to strengthen the overall design.

三相電機的變頻調速概述 Overview of the three-phase inverter motor

由于电动机在低频区工作时，因转速降低而使电动机原有设计的通风系统作用降低，电动机温度上升，因此在电动机后端装有一台单相220V或三相380V的独立轴流冷却风机，保障电动机在任何转速下得到有效的散热，可实现电动机在高速或低速下长期运行。我公司生产的YVP三相变频电动机可配制动器，也可以配编码器，实现低速无级调速控制。YVP三相变频电动机通用性好，其安装尺寸符合IEC标准，与一般标准型电动机具有互换性。

Since the motor is in a low frequency region, because the motor speed is reduced leaving the original ventilation system designed to reduce the role of the motor temperature rise, so the rear end of the motor with a single-phase 220V or 380V three-phase individual axial cooling fan, to protect effective cooling of the motor at any speed, the electric motor can run at high speed or low. I produced YVP brakes can be equipped with three-phase inverter motor can also be equipped with an encoder to achieve low stepless speed control. With the IEC standard flange Installation dimensions, YVP three-phase inverter motor keep the good universal,and it can be interchanged with general standard motor.

YVP變頻電機代號說明 YVP frequency conversion motor code description

YVP – 90 – S – 4 – B5

- B5 — 电机安装方式 / Motor mounting modality
- 4 — 极数 / Number of poles
- S — 铁芯代号 / Core length number
- 90 — 机座号 / Frame size
- YVP — 系列代码 / Series code

YVP系列技術參數 YVP series of technical parameters

3000r/min 380V 50Hz

型号 Type	额定功率 RATED OUTPUT	额定转速 RATED SPEED	效率 EFFICENCY	功率因数 POWER FOCTOR	额定电流 RATED CURRENT	额定转矩 RATED TORQUE	堵转转矩 LOCKED ROTOR TORQUE / 额定转矩 RATED TORQUE	最大转矩 MAXIMUM TORQUE / 额定转矩 RATED TORQUE	变频风机 FREQUENCY CONVERSION BLOWER 电压VOLTAGE V 三相 THREE PHASE	单相 SINGLE PHASE	转速 SPEED
	KW	rpm	η%	COS φ	A	Nm	Ts/Tn	Tmax/Tn			rpm
YVP－631－2	0.18	2800	65.0	0.80	0.53	0.61	2.2	2.2	380	220	2800
YVP－632－2	0.25	2800	68.0	0.81	0.69	0.85	2.2	2.2	380	220	2800
YVP－711－2	0.37	2830	70.0	0.81	0.99	1.25	2.2	2.2	380	220	2800
YVP－712－2	0.55	2830	73.0	0.82	1.40	1.86	2.2	2.3	380	220	2800
YVP－801－2	0.75	2840	75.0	0.83	1.83	2.52	2.2	2.3	380	220	2800
YVP－802－2	1.1	2840	77.0	0.85	2.55	3.70	2.2	2.3	380	220	2800
YVP－90S－2	1.5	2840	79.0	0.85	3.39	5.04	2.2	2.3	380	220	2800
YVP－90L－2	2.2	2840	81.0	0.86	4.80	7.40	2.2	2.3	380	220	2800
YVP－100L－2	3	2860	83.0	0.87	6.31	10.0	2.2	2.3	380	220	2800
YVP－112M－2	4	2880	84.0	0.88	8.22	13.3	2.2	2.3	380	220	2800
YVP－132S1－2	5.5	2910	85.0	0.88	11.2	18.0	2.2	2.3	380	220	2800
YVP－132S2－2	7.5	2910	86.0	0.88	15.1	24.6	2.2	2.3	380	220	2800
YVP－160M1－2	11	2930	88.0	0.89	21.3	35.9	2.2	2.3	380	220	2800
YVP－160M2－2	15	2930	89.0	0.89	28.8	48.9	2.2	2.3	380	220	2800
YVP－160L－2	18.5	2935	90.0	0.90	34.7	60.2	2.2	2.3	380	220	2800
YVP－180M－2	22	2935	90.0	0.90	41.3	71.6	2.0	2.3	380	220	2800

YVP系列技術參數 YVP series of technical parameters

1500r/min 380V 50Hz

型号 Type	额定功率 RATED OUTPUT	额定转速 RATED SPEED	效率 EFFICENCY	功率因数 POWER FOCTOR	额定电流 RATED CURRENT	额定转矩 RATED TORQUE	堵转转矩 LOCKED ROTOR TORQUE 额定转矩 RATED TORQUE	最大转矩 MAXIMUM TORQUE 额定转矩 RATED TORQUE	变频风机 FREQUENCY CONVERSION BLOWER 电压VOLTAGE V 三相 THREE PHASE	单相 SINGLE PHASE	转速 SPEED
	KW	rpm	η%	COS φ	A	Nm	Ts/Tn	Tmax/Tn			rpm
YVP－631－4	0.12	1360	57.0	0.72	0.44	0.84	2.2	2.0	380	220	2800
YVP－632－4	0.18	1360	60.0	0.73	0.62	1.26	2.2	2.0	380	220	2800
YVP－711－4	0.25	1375	65.0	0.74	0.79	1.74	2.2	2.0	380	220	2800
YVP－712－4	0.37	1375	67.0	0.75	1.12	2.57	2.2	2.0	380	220	2800
YVP－801－4	0.55	1405	71.0	0.75	1.57	3.74	2.2	2.4	380	220	2800
YVP－802－4	0.75	1405	73.0	0.77	2.02	5.10	2.2	2.4	380	220	2800
YVP－90S－4	1.1	1445	75.0	0.79	2.82	7.27	2.2	2.3	380	220	2800
YVP－90L－4	1.5	1445	78.0	0.79	3.70	9.91	2.2	2.3	380	220	2800
YVP－100L1－4	2.2	1440	80.0	0.81	5.16	14.6	2.2	2.3	380	220	2800
YVP－100L2－4	3	1440	82.0	0.82	6.78	19.9	2.2	2.3	380	220	2800
YVP－112M－4	4	1440	84.0	0.82	8.82	26.5	2.2	2.3	380	220	2800
YVP－132S1－4	5.5	1440	85.0	0.84	11.7	36.5	2.2	2.3	380	220	2800
YVP－132S2－4	7.5	1440	87.0	0.84	15.6	49.7	2.2	2.3	380	220	2800
YVP－160M－4	11	1450	88.0	0.85	21.3	72.4	2.2	2.2	380	220	2800
YVP－160L－4	15	1450	89.0	0.85	30.1	98.8	2.2	2.2	380	220	2800
YVP－180M－4	18.5	1455	90.5	0.86	36.5	121.4	2.2	2.2	380	220	2800
YVP－180L－4	22	1455	91.0	0.86	43.1	144.4	2.0	2.2	380	220	2800

1000r/min 380V 50Hz

YVP－711－6	0.18	900	58.0	0.66	0.71	1.91	1.9	2.0	380	220	2800
YVP－712－6	0.25	900	59.0	0.68	0.95	2.65	1.9	2.0	380	220	2800
YVP－801－6	0.37	910	62.0	0.70	1.30	3.88	1.9	2.0	380	220	2800
YVP－802－6	0.55	910	65.0	0.72	1.79	5.77	1.9	2.1	380	220	2800
YVP－90S－6	0.75	930	70.0	0.72	2.26	7.7	2.1	2.1	380	220	2800
YVP－90L－6	1.1	940	73.0	0.73	3.14	11.2	2.1	2.1	380	220	2800
YVP－100L－6	1.5	940	76.0	0.76	3.95	15.2	2.2	2.1	380	220	2800
YVP－112M－6	2.2	960	79.0	0.76	5.57	21.9	2.2	2.1	380	220	2800
YVP－132S－6	3	960	81.0	0.76	7.40	29.8	2.2	2.1	380	220	2800
YVP－132M1－6	4	960	83.0	0.76	9.63	39.8	2.2	2.1	380	220	2800
YVP－132M2－6	5.5	960	84.0	0.77	12.9	54.7	2.2	2.1	380	220	2800
YVP－160M－6	7.5	970	86.0	0.78	17.0	73.8	1.8	2.1	380	220	2800
YVP－160L－6	11	970	87.0	0.79	24.3	108.3	1.9	2.1	380	220	2800
YVP－180L－6	15	970	89.0	0.81	31.6	147.7	2.1	2.1	380	220	2800

YVP系列安裝尺寸 YVP series installation size

◆IM B3 H63–180

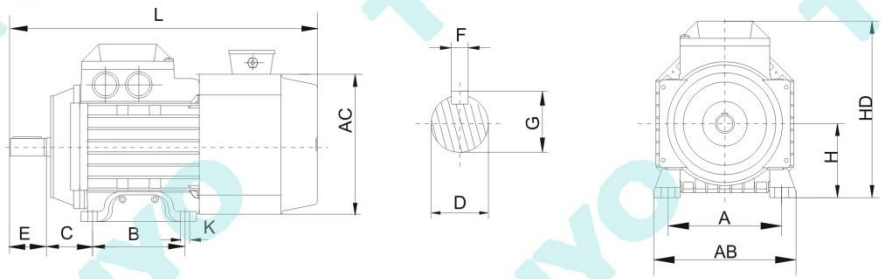

机座号 FRAME SIZE	外型及安裝尺寸 INSTALLATION DIMENSIONS												
	A	B	C	D	E	F	G	H	K	AB	AC	HD	L
63	100	80	40	ø11	23	4	12.5	63	ø7	135	120×120	167	260
71	112	90	45	ø14	30	5	16	71	ø7	137	130×130	178	295
80	125	100	50	ø19	40	6	21.5	80	ø10	155	145×145	190	340
90S	140	100	56	ø24	50	8	27	90	ø10	175	160×160	205	390
90L	140	125	56	ø24	50	8	27	90	ø10	175	160×160	205	400
100L	160	140	63	ø28	60	8	31	100	ø12	200	185×185	240	430
112M	190	140	70	ø28	60	8	31	112	ø12	230	200×200	270	460
132S	216	140	89	ø38	80	10	41	132	ø12	270	245×245	315	525
132M	216	178	89	ø38	80	10	41	132	ø12	270	245×245	315	525
160M	254	210	108	ø42	110	12	45	160	ø14.5	320	335×335	450	850
160L	254	254	108	ø42	110	12	45	160	ø14.5	320	335×335	450	870
180M	279	241	121	ø48	110	14	51.5	180	ø14.5	355	370×370	500	880
180L	279	279	121	ø48	110	14	51.5	180	ø14.5	355	370×370	500	980

YVP系列安裝尺寸 YVP series installation size

◆ IM B14 H63–112

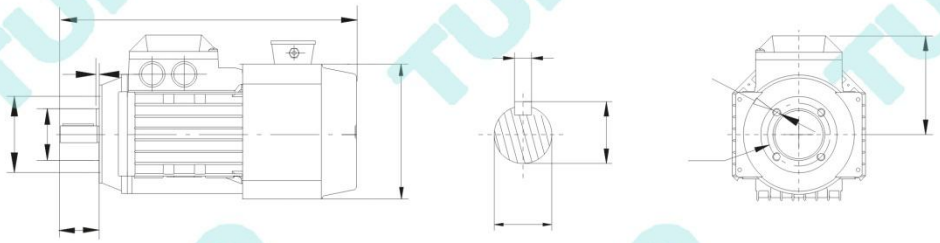

机座号 FRAME SIZE	外型及安装尺寸 INSTALLATION DIMENSIONS											
	D	E	F	G	M	N	P	S	T	AC	AD	L
63	ø11	23	4	12.5	75	60	90	M5	2.5	120×120	104	260
71	ø14	30	5	16	85	70	105	M6	2.5	130×130	107	295
80	ø19	40	6	21.5	100	80	110	M6	3.0	145×145	115	340
90S	ø24	50	8	27	115	95	120	M8	3.0	160×160	122	390
90L	ø24	50	8	27	115	95	120	M8	3.0	160×160	122	400
100L	ø28	60	8	31	130	110	155	M8	3.5	185×185	137	430
112M	ø28	60	8	31	130	110	160	M8	3.5	200×200	155	460

◆ IM B34 H63–112

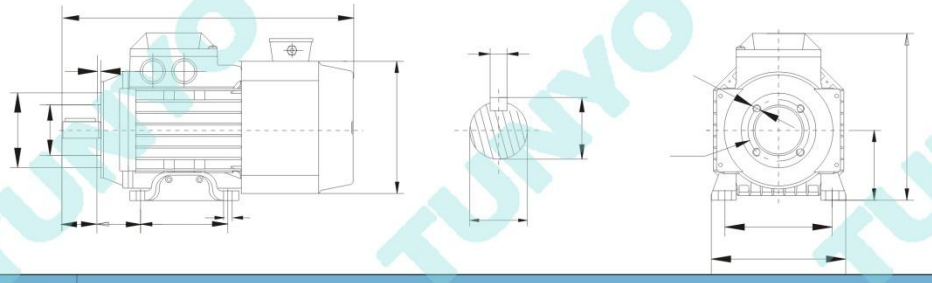

机座号 FRAME SIZE	外型及安装尺寸 INSTALLATION DIMENSIONS																	
	A	B	C	D	E	F	G	H	K	M	N	P	S	T	AB	AC	HD	L
63	100	80	40	ø11	23	4	12.5	63	ø7	75	60	90	M5	2.5	135	120×120	167	260
71	112	90	45	ø14	30	5	16	71	ø7	85	70	105	M6	2.5	137	130×130	178	295
80	125	100	50	ø19	40	6	21.5	80	ø10	100	80	110	M6	3.0	155	145×145	190	340
90S	140	100	56	ø24	50	8	27	90	ø10	115	95	120	M8	3.0	175	160×160	205	390
90L	140	125	56	ø24	50	8	27	90	ø10	115	95	120	M8	3.0	175	160×160	205	400
100L	160	140	63	ø28	60	8	31	100	ø12	130	110	155	M8	3.5	200	185×185	240	430
112M	190	140	70	ø28	60	8	31	112	ø12	130	110	160	M8	3.5	230	200×200	270	460

YVP系列安裝尺寸 YVP series installation size

◆IM B5 H63–180

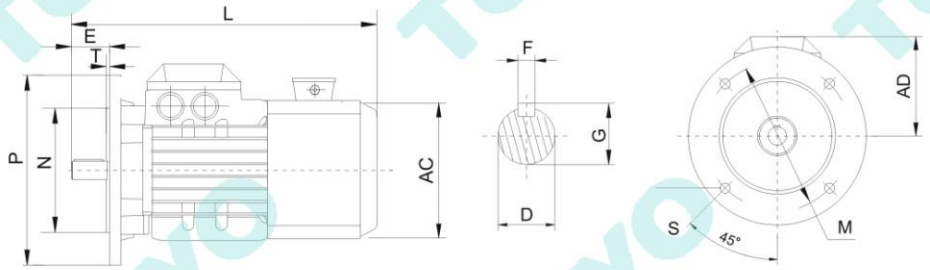

机座号 FRAME SIZE	外型及安装尺寸 INSTALLATION DIMENSIONS											
	D	E	F	G	M	N	P	S	T	AC	AD	L
63	ø 11	23	4	12.5	115	95	140	10	3.0	120×120	104	260
71	ø 14	30	5	16	130	110	160	10	3.5	130×130	107	295
80M	ø 19	40	6	21.5	165	130	200	12	3.5	145×145	115	340
90S	ø 24	50	8	27	165	130	200	12	3.5	160×160	122	390
90L	ø 24	50	8	27	165	130	200	12	3.5	160×160	122	400
100L	28	60	8	31	215	180	250	14.5	4	185×185	137	430
112M	28	60	8	31	215	180	250	14.5	4	200×200	155	460
132S	38	80	10	41	265	230	300	14.5	4	245×245	180	525
132M	38	80	10	41	265	230	300	14.5	4	245×245	180	525
160M	42	110	12	45	300	250	350	18.5	5	335×335	290	850
160L	42	110	12	45	300	250	350	18.5	5	335×335	290	870
180M	48	110	14	51.5	300	250	350	18.5	5	370×370	340	880
180L	48	110	14	51.5	300	250	350	18.4	5	370×370	340	980

YVP系列安裝尺寸 YVP series installation size

◆ IM B35 H63–180

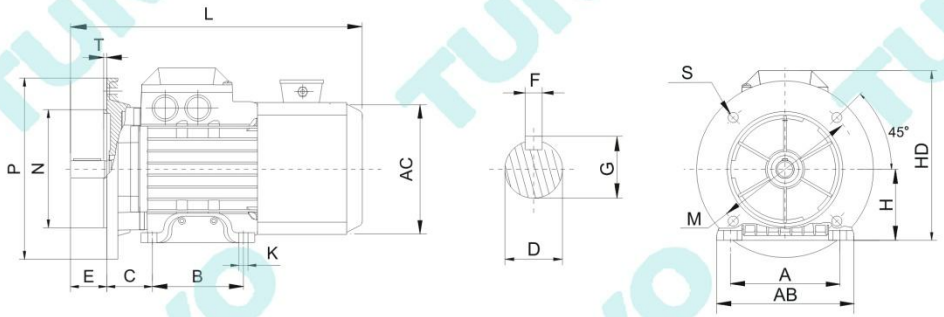

机座号 FRAME SIZE	外型及安装尺寸 INSTALLATION DIMENSIONS																	
	A	B	C	D	E	F	G	H	K	M	N	P	S	T	AB	AC	HD	L
63	100	80	40	ø11	23	4	12.5	63	ø7	115	95	140	10	2.5	115	120×120	167	260
71	112	90	45	ø14	30	5	16	71	ø7	130	110	160	10	3.5	136	130×130	178	295
80M	125	100	50	ø19	40	6	21.5	80	ø10	165	130	200	12	3.5	154	145×145	190	340
90S	140	100	56	ø24	50	8	27	90	ø10	165	130	200	12	3.5	180	160×160	205	390
90L	140	125	56	ø24	50	8	27	90	ø10	165	130	200	12	3.5	180	160×160	205	400
100L	160	140	63	ø28	60	8	31	100	ø12	215	180	250	14.5	4	205	185×185	240	430
112M	190	140	70	ø28	60	8	31	112	ø12	215	180	250	14.5	4	235	200×200	270	460
132S	216	140	89	ø38	80	10	41	132	ø12	265	230	300	14.5	4	261	245×245	310	525
132M	216	178	89	ø38	80	10	41	132	ø12	265	230	300	14.5	4	261	245×245	310	525
160M	254	210	108	ø42	110	12	45	160	ø14.5	300	250	350	18.5	5	320	335×335	450	850
160L	254	254	108	ø42	110	12	45	160	ø14.5	300	250	350	18.5	5	320	335×335	450	870
180M	279	241	121	ø48	110	14	51.5	180	ø14.5	300	250	350	18.5	5	355	370×370	500	880
180L	279	279	121	ø48	110	14	51.5	180	ø14.5	300	250	350	18.5	5	355	370×370	500	980

TUNYO

東洋蝸輪蝸杆减速機

TUNYO NMRV WORM GEAR UNTIS

PROFESSIONAL MANUFACTURER OF POWER TRANSMISSION

DESIGN PHILOSOPHY: To follow the law, but always beyond.

BUSINESS PHILOSOPHY: Design for customer demand , dedication for customer satisfaction

東洋R系列蝸輪減速機 TUNYO R series worm reducer

NRV

NMRV(IEC)

NMRV(ST)

DRV

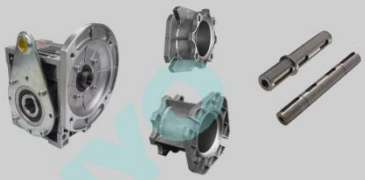

减速机配件

結構分解圖 Structure diagram

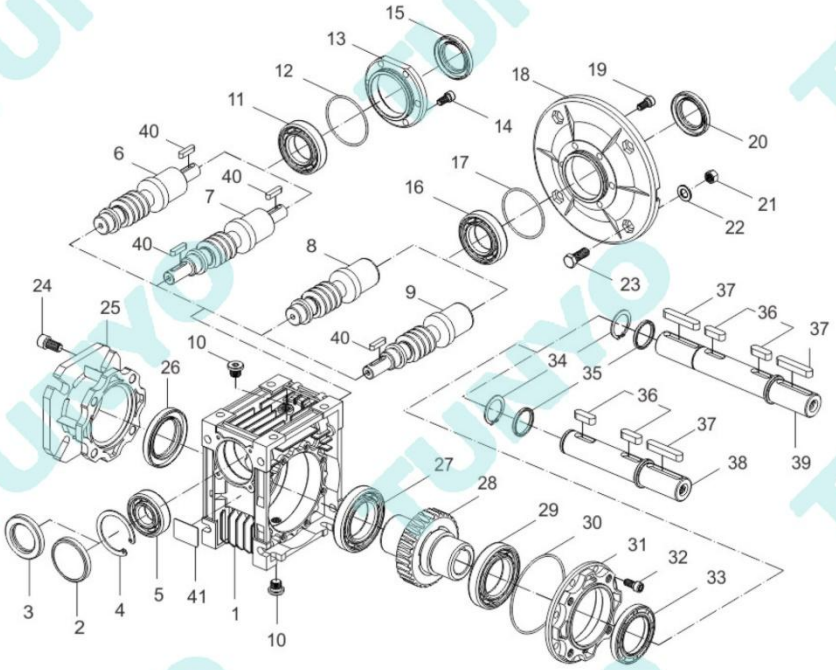

1	箱体 / Cablint	22	垫圈 / Washer
2	油封盖 / Closing cap	23	外六角螺栓 / Six hexagon bolt
3	油封 / Oil seal	24	内六角螺钉 / Inner hex screw
4	孔用挡圈 / Hole-circlip	25	输出法兰 / Output flange
5	轴承 / Bearing	26	油封 / Oil seal
6	轴输入蜗杆 / Input shaft worm	27	轴承 / Bearing
7	双轴输入蜗杆 / Double input worm	28	蜗轮 / Worm gear
8	孔输入蜗杆 / Input hole worm	29	轴承 / Bearing
9	孔输入轴输入蜗杆 / Input shaft and hole worm	30	O型橡胶密封圈 / O-ring
10	油塞 / Oil plug	31	输出端盖 / Bearing support cover
11	轴承 / Bearing	32	内六角螺钉 / Inner hex screw
12	O型橡胶密封圈 / O-ring	33	油封 / Oil seal
13	轴承座 / Bearing block	34	轴用挡圈 / Shaft-circlip
14	内六角螺钉 / Inner hex screw	35	垫圈 / Washer
15	油封 / Oil seal	36	键 / Key
16	轴承 / Bearing	37	键 / Key
17	O型橡胶密封圈 / O-ring	38	单向输出轴 / Single output shaft
18	输入法兰 / Intput flange	39	双向输出轴 / Double output shaft
19	内六角螺钉 / Inner hex screw	40	键 / Key
20	油封 / Oil seal	41	铭牌 / Nameplate
21	外六角螺母 / Six hexagon nut		

產品概述 Summarize

◆ 结构特点 / Structure Features

1. 优质铝合金铸造箱体，适应全方位的万能安装配置；
2. 充分的冷却筋条，使机体具有优良的热传导性能；
3. 从025-150共10种机座规格；传递功率范围从60W-15kW;
4. 速比范围大，每单个机座具有从5：1到100：1的12种减速比；
5. 精密磨削加工的硬齿面传动蜗杆，效率高、输出扭矩大；
6. 低噪声平稳运转，能适合在恶劣环境中长期连续工作；
7. 重量轻，机械强度高；
8. 模块化组合DRV将NMRV减速机的传动比拓展至：i=5-5000

1. high qualitgy die casting aluminum alloy housing ,suitable for universal mounting .
2. Heat sink design for cooling provides great surface area and higher thermal capacity than the casting iron housings
3. 025 to 150,with power scope from 60W to 15kW.
4. Larger speed ratio range .each single frame size has 12 ratios from 5:1 to 100:1
5. Hardened worm with fine grinding has zhe features of higher efficiency and big output torque .
6. Low noise and stably running ,can adapt long term work condition in terrible environments
7. Light weight ,high mechanical strength .
8. Modularization combination DRV extend the ration of NMRV reducers from i=5:1 to 5000:1.

◆ 主要材料 / Main Materials

1. 外壳：铝合金（机座：025－090），铸铁（机座：110－150）；
2. 蜗杆：20Cr，渗碳淬火，齿面硬度58－62HRC，精磨后保持渗碳层厚度0.3－0.5mm；
3. 蜗轮：耐磨镍青铜。

1. Housing: die-cast aluminum alloy(frame size 025 to 090);cast iron(frame size:110 to 150);
2. Worm: 20Cr, carbonize&quencher heat treatment make the hardness of gear's surface up to 58-62HRC,retain carburized layer's thickness between 0.3 and 0.5mm after accurate grinding.
3. Worm wheel:wearable nickel bronze alloy.

◆ 表面涂装 / Surface Painting

铝合金外壳：

1.先抛丸处理，再经特种防腐处理，保持银白金属感，并耐汽油、二甲苯等有机溶剂的腐蚀；
2.磷化处理后，再喷RAL5010蓝色或RAL7035浅灰色涂料。

铸铁外壳：先涂红色防锈漆，后喷涂RAL5010蓝色或RAL7035浅灰色涂料。

Aluminum alloy housing:
1. Shot blasting and special antiseptic treat-ment on the aluminum alloy surface.
2. After phosphating, paint with RAL5010 blue or RAL7035 grey paint.

Cast iron housing: First paint with red antirust paint, then paint white RAL5010 blue or RAL7035

型號説明 Description

减速机 / Gear unit　　电机 / Motors

NMRV	063	/	50	/	E	/	FA1	/	SS1	/	71B5	/	B3	/	0.37-4P	/	M	/	1	/	X
①	②		③		④		⑤		⑥		⑦		⑧		⑨		⑩		⑪		⑫

NO.	说明	Comments
1	减速机系列代号： NMRV:孔输入带输入法兰 NRV：轴输入不带输入法兰 DRV:双蜗轮蜗杆减速机（NMRV+NMRV/NRV+NMRV）	Code for gear units series： 1. NMRV:Hole input with flange 2. NRV：Shaft input without flange 3. DRV:Combination worm gear units（NMRV+NMRV/NRV+NMRV）
2	蜗轮蜗杆减速机中心距（规格） NMRV:025,030,040,050,063,075,090,110,130,150 DRV:030/063…….	Central distance of worm gear units(spec) NMRV:025,030,040,050,063,075,090,110,130,150 DRV:030/063…….
3	减速机速比 NMRV:i=5,7.5,10,15,20,25,30,40,50,60,80,100 DRV:i=100…..5000	Speed ratio of reducer 1.NMRV:i=5,7.5,10,15,20,25,30,40,50,60,80,100 2.DRV:i=100…..5000
4	无代号表示不带蜗杆同向尾出轴 E：带蜗杆同向尾出轴	1.No mark means single extension worm shaft 2.E:Double extension worm shaft
5	1.无代号表示不带输出法兰 2.FA,FB,FC,FD,FE(1/2):输出法兰代号和位置	1.No mark means without output flange 2.FA、FB、FC、FD、FE(1/2):output Flange and position
6	1.无代号表示孔输出 2.SS(1/2):单向输出轴和位置 3.DS：双向输出轴	1.No mark means hole output 2.SS(1/2):Single output shaft and position 3.DS:Double output shaft
7	输入法兰规格形式（不带电机时） 1.71B5：IEC输入法兰及规格代号 2. 56C：NEMA输入法兰及规格代号 3. ST80：伺服电机输入法兰规格代号	Normalized from of input flange (without motor) 1.71B5:IEC input flange code 2. 56C: NEMA input flange code 3. ST80：Servo motor input flange code
8	安装方位代号	Installation position code
9	1.无代号表示不带电机 2.0.37-4P: 电机功率、级数 3.80ST-M01330:伺服电机型号	1. No mark means without motor 1.0.37-4P: Model motors(poles of power) 2.80ST-M01330: Servo motor type
10	1.无代号表示不带制动器 2.M:制动器	1.No mark means without brake 2.M:brake
11	电机接线盒位置，默认位置1可以不写	Position of motor terminal box default position 1 not to write out is ok
12	电机进线位置，默认位置X 可以不写	Coil position for motor , default position X not to write out is ok

注：订单时请说明是否带电机，一般按不带电机供应。

NOTE: When ordering, you should show whether the reducers are equipped with motors, otherwise reducers aren't supplied with motors.

示例Example：NMRV063 / 60 / FA2 / 80B5

選型相關參數 Relevant parameter

◆ 功率 P

$P_1 = P_2 / \eta$ (kW)
$P_{1n} \geqslant P_1 \cdot fs$ (kW)

P_1 输入功率
P_{1n} 输入电机额定功率
η 传动效率
P_2 输出功率
fs 服务系数

在NMRV蜗轮蜗杆减速机选型表中，这个功率P_{1n}是指在输入转速为n_1并且对应的服务系数fs=1时，减速机的安全输入功率，单位kW。
传动效率η值是减速机经过足够长时间的跑合后计算得到的。跑合后在动转过程中，表面温度下降并最终稳定。需要特别强调的是样本中给定的额定转矩值M_{2n}应该考虑到传动效率η的关系。

◆ Power p

$P_1 = P_2 / \eta$ (kW)
$P_{1n} \geqslant P_1 \cdot fs$ (kW)

P_1 Input power
P_{1n} Rated input motor power
η Transmission efficiency
P_2 Output power
fs Service factor

The parameter can be found in the NMRV gear-box rating charts and represents the kW that can be safely transmitted to the gearbox, based on input speed n_1 and service factor fs=1.
Values of η are calculated for gearboxes after a sufficiently in oreration reduces and finally stabilizes. It may be worth high lighting that values of rated torque M_{2n} given in the catalogue take the transmission efficiency η into consideration.

轉速n Rotation speed n

n_1 减速机输入转速
n_2 减速机输出转速
若是减速箱外部传动装置驱动，为了优化工作条件和提高使用寿命，建议使用1400r/min或更低转速。

n_1 Gear units input speed
n_2 Gear units output speed
If driven by the external gearing, 1400r/min or lower rotation speed is suggested so as to optimize the working conditions and prolong the service life.

傳動比i Transmission ration i

$$i = n_1 / n_2$$

扭矩M Torque M

$M_2 = 9550 \cdot P_1 \cdot \eta / n_2$ (Nm)
$M_{2n} \geqslant M_2 \cdot fs$ (Nm)

M_2 输出扭矩
M_{2n} 额定输出扭矩
P_1 输入功率
η 传动效率
fs 服务系数

$M_2 = 9550 \cdot P_1 \cdot \eta / n_2$ (Nm)
$M_{2n} \geqslant M_2 \cdot fs$ (Nm)

M_2 Output torque
M_{2n} Rated output torque
P_1 Input power
η Transmission efficiency
fs Service factor

選型相關參數 Relevant parameter

◆ 服务系数fs Service factor fs

减速机上的从动机构的受驱动效果是用服务系数fs这个系数来衡量的。该服务系数根据每天的运转时间和启动频率Z而定的。三种负载分类取决于惯性加速系数，在下图中可读取实际应用的服务系数，按这图表选取的服务系数必须小于或者等于性能参数表中提供的服务系数。

The effect of the driven machine on the gear unit is taken into account to a sufficient level of accuracy using the service factor fs.The service factor is determined according to the daily operating time and the starting frequency Z.Three load classifications are considered depending on the mass acceleration factor .You can read off the service factor applicable to your application in following figure. The service factor selected using this diagram must be less than or equal to the service factor as given in the performance parameter table.

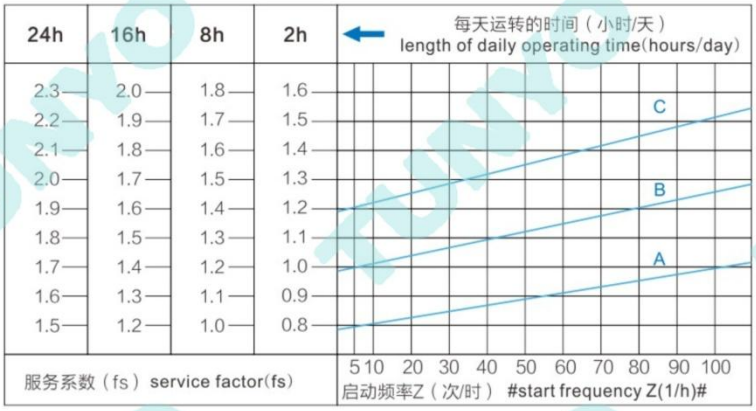

◆ 启动频率Z：周期包括所有启动，制作的次数以及变速电机高低速变化时的次数。

◆ Starting frequency Z:The cycles include all starting and braking procedures as well as change overs from low to high speed.

負載類型 Load classifications

负载性质：

A. 均匀冲击负载，允许惯性加速系数Fa≤0.3
B. 中等冲击负载，允许惯性加速系数Fa≤3
C. 重冲击负载，允许惯性加速系数Fa≤10

Type of load:

A. Uniform ,permitted mass acceleration factor Fa≤0.3
B. Moderate shock load,permitted mass acceleration factor Fa≤3
C. Heavy shock load,permitted mass acceleration factor Fa≤10

選型相關參數 Relevant parameter

◆ 负载类型：

轻负载的螺杆输送，风扇，装备线，输送带，小型搅拌器，电梯，清洗机器，过滤器，控制驱动。
卷扬机，木工机器进料器，货物起重机，平衡器，绞螺纹机器，中型搅拌器，重型输送带，绞盘，滑动闸门，挂料机，包装机械，混凝土搅拌机，行车驱动装置，铣床，齿轮泵。
大型搅拌器，剪床，压机，离心机，旋转支撑装置，重型绞盘和起重机，磨床，石材打磨机，翻斗机，钻床，冲床，凸轮压机，摺床，机床转盘，翻桶装置，振荡装置，破碎机。

Load Classifications:

Screw feeders for light materials,fans,assermbly lines,conveyor belts for light materials,small mixers,lifts,cleaning machines,medium mixers,conveyor belts for heavy materials,winches,sliding doors,fertilizer scrapers,packing machines,concrete mixers,crane mechanisms,milling cutters,folding machines,gear pumps.
Mixers for hravy materials,shears,presses centrifuges,rotating supports,winches and lifts for heavy materials,grinding lathes,stone mills,bucket elevators,drilling machines,hammer mills,campresses,folding machines,turntables,tumbling barrels,vibrators,shredders.

慣性加速系數 Mass acceleration factor

惯性加速系数计算如下：

Fa=Jc/Jm

Fa惯性加速系数
Jc所有外部传动惯量（kgm2）
Jm驱动电机的传动惯量（kgm2）
如果惯性加速系数Fa>10，请与我们技术部联系。

受环境温度影响，服务系数fs仍须按以下调整：
1.环境温度30～40℃：fs×（1.1～1.2）
2.环境温度40～50℃：fs×（1.3～1.4）
3.环境温度50～60℃：fs×（1.5～1.6）
4.环境温度>60℃，请与我们技术服务人员联系。

为了保持减速机的使用寿命，从产品样本中所选择的服务系数fs应等于或略高于计算出的服务系数fs。

The mass acceleration factor is calculated as follows:

Fa=Jc/Jm

Fa Mass acceleration factor
Jc All external mass moments of inertia(kgm2)
Jm Mass moment of inertia on the motor end(kgm2)
If mass acceleration factors fa>10,please call our Technical Service.

Service factor fs should be adjusted as followings:
1.ambient temperature is 30～40℃：fs×（1.1～1.2）
2.ambient temperature is 40～50℃：fs×（1.3～1.4）
3.ambient temperature is 50～60℃：fs×（1.5～1.6）
4.ambient temperature is >60℃,please call our Technical Service.

To keep the service-life of gear units,use factor fs selected from the catalogue must be equal or slightly higher than the calculated use factor fs.

徑向載荷Fr Radial loads Fr

在决定影响径向载荷时，安装在轴端上的传动件类型必须考虑在内，不同类型的传动对应不同的传动附加系数fz，列表如下：

When determining the resulting radial loads,the type of transmission elements,mounted on the shaft end must be considered,Varous transmission elements are corresponding with following transmission element factors fz.

選型相關參數 Relevant parameter

传动件 Transmission element	传动附加系数fz Transmission element factor fz	注释 Comments
齿轮 Gears	1.00	≥17齿 teeth
	1.15	<17齿 teeth
链轮 Chain sprockets	1.00	≥20齿 teeth
	1.25	<20齿 teeth
	1.40	<13齿 teeth
V 带轮 Narrow V-belt pulleys	1.75	有预紧力作用 Influence of the tensile force
平带轮 Flat belt pulleys	2.50	有预紧力作用 Influence of the tensile force
齿带轮 Toothed belt pulleys	2.50	有预紧力作用 Influence of the tensile force

作用在轴上的径向载荷按如下公式计算：

$$Fr = \frac{M \cdot 2000 \cdot fz}{d_0} \text{ (N)}$$

Fr 作用在轴上的载荷（N）
M 作用在轴上的扭矩（Nm）
d_0 安装在轴上传动件的平均直径（mm）
fz 传动附加系数

The overhung loads exerted on the motor or gear shaft is then calculated as follows.

$$Fr = \frac{M \cdot 2000 \cdot fz}{d_0} \text{ (N)}$$

Fr Resultingradial load (N)
M Torque on the shaft (Nm)
d_0 Mean diameter of the mounted transmis sion element in (mm)
fz Transmission element factor

当径向负荷不作用在轴中点时，按以下公式计算有效负荷：

$$F \times L = \frac{F_{r2} \cdot a}{(b+x)} \text{ (N)}$$

F_{r2} 依据下面表格给出中底脚安装式齿轮减速机的许可径向载荷（X=L/2）（N）
a,b 减速机径向换算常量（mm）
x 轴肩到实际作用点的距离（mm）
a,b,F_{r2} 的数值在下面表格给出：

The allowed radial load force on the shaft is calculated with the following formula:

$$F \times L = \frac{F_{r2} \cdot a}{(b+x)} \text{ (N)}$$

F_{r2} Permitted overhung load(X=L/2)for foot-mounted gear units according to the selection tables in(N)
a,b Gear unit constant for overhung load conversion(mm)
x Distance form the shaft shouldert to the force application point in(mm)

The values of a,b,F_{r2} are biven in the following tables:

当径向和轴向负载同时存在时，最大的允许轴向负载值只是径向负载值的1/5，图表中所表示的是输出轴的最大承重量。

The maxium admissible axial loads are 1/5 of the value of the given radial load when they are applied in combination with the radial load.The tables relating to the output shafts give the maximum admissible value.

選型相關參數 Relevant parameter

◆ 输出轴径向载荷 /Output shafts radial loads

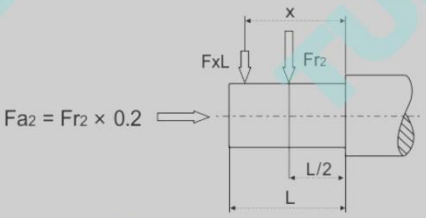

Fa_2 = 输出轴向载荷 Output axial loads

NMRV	025	030	040	050	063	075	090	110	130	150
a	50	65	84	101	120	131	162	176	188	215
b	38	50	64	76	95	101	122	136	148	174
$F_{r2\,max}$	1350	1830	3490	4840	6270	7380	8180	12000	13500	18000

◆ 输入轴径向载荷 / Input shafts radial loads

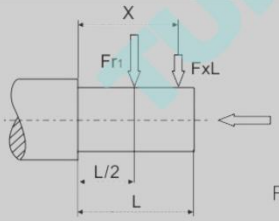

Fa_1 = 输入轴向载荷 Input axial loads

NRV	030	040	050	063	075	090	110	130	150
a	86	106	129	159	192	227	266	314	350
b	76	94.5	114	139	167	202	236	274	310
$F_{r1\,max}$	210	350	490	700	980	1270	1700	2100	2800

選型表注釋 Selection tables comments

P_{1n}	输入电机额定功率（kW）	P_{1n}	Rated power driving motor (kW)
n_2	输出转速（r/min）	n_2	Output speed (r/min)
M_{2n}	额定输出扭矩（Nm）	M_{2n}	Rated output torque (Nm)
$M_{2\,max}$	最大允许输出扭矩（Nm）	$M_{2\,max}$	Permissible output torque (Nm)
i	减速机速比	i	Gear unit ratio
fs	服务系数	fs	Service factor
	RV减速机型号		RV Gear unit type
	DRV减速机型号		DRV gear unit type
	电机型号		Motor type

選型相關參數 Relevant parameter

选型举例分析 / Selection example

减速电机

例：被驱动设备所需功率0.5kW，n_1=1400r/min，均匀冲击负载，启动频率20次/小时，24小时连续运行，环境温度32℃，输出转速n_2=93.3r/min，减速电机要求B3安装方位，则：

$$i=\frac{n_1}{n_2}=\frac{1400}{93.3}=15$$

查P55页啮合参数表,估计当i=15时, η_d=0.82查看调整服务系数得fs=1.53×1.12=1.714,$P_{1n}\geq P_2/\eta_d\cdot fs$=0.5/0.82×1.714=1.045(kW),查NMRV系列性能参数表可确定减速电机型号为:

NMRV075/15/B3/1.1-4P,输出扭矩M_2计算:

$$M_2=\frac{9550\cdot P_2}{n_2}=\frac{9550\times 0.5}{93.3}=51.18\ (Nm)$$

$$M_{2n}=95\geq M_2\cdot fs=51.18\times 1.714=87.72\ (Nm)$$

GEAR MOTOR

Exampie:The input power of driver machine is 0.5kW,n_1=1400r/min,uniform,start up frequency 20(1/h),continuous running for 24hours,the ambient temperature is 32℃, n_2=93. 3r/min, B3 mounted so:

$$i=\frac{n_1}{n_2}=\frac{1400}{93.3}=15$$

Check mash table on P55,estimate when the i=15,η_d=0.82. Check and adjust the service factor,will get fs=1.53×1.12=1.714.$P_{1n}\geq P_2/\eta_d\cdot fs$=0.5/0.82×1.714=1.045(kW).

Choose type:**NMRV075/15/B3/1.1-4P**

$$M_2=\frac{9550\cdot P_2}{n_2}=\frac{9550\times 0.5}{93.3}=51.18\ (Nm)$$

$$M_{2n}=95\geq M_2\cdot fs=51.18\times 1.714=87.72\ (Nm)$$

减速机

例：被驱动设备所需扭矩为300Nm，工作8小时连续运行，均匀冲击负载，启动频率5次/小时，环境温度30℃，即可选用系数fs=1.2×1.1=1.32,减速机输入转速n_1=900r/min，输出转速n_2=22.5r/min。

$$M_{2n}\geq M_2\cdot fs=300\times 1.32=396\ (Nm)$$

$$i=\frac{n_1}{n_2}=\frac{900}{22.5}=40$$

查NMRV系列性能参数表可确定减速机型号为：

NMRV090/40

GEAR UNITS

Example:Required torque 300Nm on driven machine,continuous running for 8 hours,uniform loda,the ambient temperature is 30℃,then choose service factor fs=1.2×1.1=1.32,n_1=900r/min,n_2=22.5r/min.

$$M_{2n}\geq M_2\cdot fs=300\times 1.32=396\ (Nm)$$

$$i=\frac{n_1}{n_2}=\frac{900}{22.5}=40$$

Choose type：**NMRV090/40**

效率与自锁特性 / Efficiency & irreversibility character

效率是减速机一个重要参数,效率η的值取决于下列参数:1.蜗轮蜗杆的螺旋角；2.输入转速；3.蜗轮蜗杆的磨合时间；4.油品、油封和轴承的性能。在第55页上的啮合参数表列出了动态效率（n_1=1400）及静态效率参数。请注意：这些参数是指减速机磨合后性能稳定的计算值。另外，样本中规定的扭矩M_{2n}也是减速机磨合性能稳定的计算值。上述的实际值可能会有上下偏差。

Efficiency is an important parmeter of reducer,efficiency η depends on the following parameters:1.helix angle of gearing;2.driving speed;3.running-in of gearing;4.The performance of oil,oil seal and bearing,the mesh date table on page 55 shows dynamic efficiency (n_1=1400) and static efficiency values.Remember that these values are only achieved after the unit has been run in.Torque values M_{2n} indicated in the catalogue are calculated by considering the steady-state performance of the gearboxes.The actual values mentioned above may be have deflection.

選型相關參數 Relevant parameter

动态自锁 / Dynamic irreversibilty

动态自锁是指当马达输入突然停止时，输出轴能同步停止。此条件要求动态效率 η_d<0.4（参见第55页表格）

Dynamic irreversibility achieved when the output shaft stops instantly when drive is no longer transmitted through the worm shaft.this condition requires a dynamic efficiency of ηd<0.4(see table on page 55).

静态自锁 / Static irreversibilty

静态自锁是指当减速机处于静止状态时，输出轴上的负载不能把蜗轮推动。
此条件要求静态效率 η_s<0.5（参见第55页表格）

Static irreversibility is achieved when the gear reducer at a standstill.The application of aload to the output shaft can't drive the worm shaft.This condition requires a static efficiency of η_s<0.5(see table on page 55).

η_d	>0.6	0.5~0.6	0.4~0.5	<0.4
动态自锁效果	动态不自锁	动态自锁很低	动态自锁良好	动态自锁
Dynamic irreversibility	Dynamic reversibility	Low dynamic reversibility	Good dynamic irreversibility	Dynamic irreversibility

η_s	>0.55	0.5~0.55	<0.5
静态自锁效果	静态不自锁	静态自锁很低	静态自锁
Dynamic irreversibility	Static reversibility	Low static reversibility	Static irreversibility

上述表格中所有参数只是供大概参考，振动和冲击也会影响减速机的自锁功能。事实上要保证完全自锁是不可能的，我们建议需要时安装外部的安全制动的装置。对于一个组合减速机自锁条件时，必须考虑单减速机的自锁功能效率，因为整体自锁功能是：$\eta_{tot} = \eta_1 \times \eta_2$

The table shows approximate irreversibility classes.Vibrations and shocks can affect a gear reducer's irreversibility.As it is virtually impossible to provide and guarantee total non reversing,we recommend the use of an external brake with sufficient capability to prevent vibrations in duced starting,where these circumstances are required.For the irreversibility conditions of a combined geared unit one must consider that the efficiency of the group is given by the product of the efficiencies of each single reducer: $\eta_{tot}=\eta_1 \times \eta_2$.

NMRV減速機嚙合參數 Mesh data

NMRV	i	5	7.5	10	15	20	25	30	40	50	60	80	100
025	Z1	6	4	3	2	2	–	1	1	1	1	–	–
	m	1.1	1.18	1.23	1.27	0.98	–	1.29	0.99	0.80	0.67	–	–
	γ	30° 58′	21° 48′	16° 42′	11° 19′	10° 53′	–	5° 29′	5° 29′	4° 34′	3° 23′	–	–
	η_d(1400)	0.87	0.85	0.83	0.79	0.75	–	0.67	0.62	0.58	0.55	–	–
	η_s	0.72	0.71	0.68	0.61	0.56	–	0.46	0.41	0.36	0.34	–	–
030	Z1	6	4	3	2	2	1	1.5	1	1	1	1	–
	m	1.3	1.36	1.39	1.42	1.09	1.69	1.43	1.10	0.89	0.74	0.56	–
	γ	29° 03′	20° 19′	15° 31′	10° 29′	5° 42′	6° 10′	5° 17′	2° 52′	3° 26′	2° 52′	1° 58′	–
	η_d(1400)	0.87	0.85	0.82	0.77	0.73	0.68	0.65	0.59	0.55	0.51	0.44	–
	η_s	0.72	0.67	0.63	0.55	0.5	0.43	0.39	0.35	0.31	0.27	0.23	–
040	Z1	6	4	3	2	2	2	1	1	1	1	1	1
	m	1.65	1.87	1.95	2.00	1.54	1.26	2.04	1.55	1.27	1.06	0.80	0.65
	γ	30° 58′	21° 48′	16° 42′	11° 19′	11° 19′	8° 08′	5° 43′	5° 43′	4° 05′	2° 52′	2° 52′	2° 29′
	η_d(1400)	0.89	0.87	0.85	0.82	0.78	0.75	0.7	0.65	0.62	0.58	0.52	0.47
	η_s	0.74	0.71	0.67	0.6	0.55	0.51	0.45	0.4	0.36	0.32	0.28	0.24
050	Z1	6	4	3	2	2	2	1	1	1	1	1	1
	m	2.25	2.34	2.43	2.50	1.92	1.56	2.54	1.94	1.58	1.32	1.00	0.80
	γ	30° 58′	21° 48′	16° 42′	11° 19′	11° 19′	9° 05′	5° 43′	5° 43′	4° 21′	2° 52′	2° 52′	2° 17′
	η_d(1400)	0.89	0.88	0.86	0.82	0.79	0.76	0.72	0.67	0.63	0.59	0.53	0.49
	η_s	0.74	0.7	0.66	0.59	0.55	0.51	0.44	0.39	0.35	0.32	0.27	0.23
063	Z1	–	4	3	2	2	2	1	1	1	1	1	1
	m	–	2.96	3.08	3.17	2.44	1.98	3.23	2.47	1.99	1.68	1.27	1.02
	γ	–	24° 31′	18° 53′	12° 51′	11° 19′	8° 45′	6° 30′	5° 43′	4° 24′	3° 03′	2° 52′	2° 12′
	η_d(1400)	–	0.88	0.87	0.83	0.81	0.78	0.72	0.7	0.66	0.62	0.57	0.51
	η_s	–	0.71	0.67	0.6	0.55	0.51	0.45	0.4	0.36	0.33	0.28	0.24
075	Z1	–	4	3	2	2	2	1	1	1	1	1	1
	m	–	3.53	3.70	3.83	2.94	2.39	3.92	2.99	2.41	2.02	1.54	1.24
	γ	–	28° 04′	21° 48′	14° 56′	11° 19′	11° 19′	7° 36′	5° 43′	5° 43′	3° 49′	4° 21′	2° 52′
	η_d(1400)	–	0.89	0.88	0.85	0.82	0.80	0.76	0.72	0.69	0.65	0.60	0.55
	η_s	–	0.71	0.68	0.61	0.57	0.53	0.46	0.42	0.38	0.35	0.29	0.26
090	Z1	–	4	3	2	2	2	1	1	1	1	1	1
	m	–	4.23	4.47	4.66	3.60	2.93	4.79	3.67	2.97	2.49	1.89	1.52
	γ	–	33° 41′	26° 34′	18° 26′	14° 02′	11° 19′	9° 28′	7° 08′	5° 43′	4° 46′	3° 53′	2° 52′
	η_d(1400)	–	0.9	0.89	0.86	0.84	0.82	0.78	0.75	0.72	0.69	0.63	0.59
	η_s	–	0.73	0.7	0.64	0.6	0.56	0.49	0.45	0.41	0.38	0.32	0.28
110	Z1	–	4	3	2	2	2	1	1	1	1	1	1
	m	–	5.18	5.45	5.67	4.47	3.64	5.82	4.58	3.71	3.12	2.36	1.91
	γ	–	28° 46′	22° 22′	15° 21′	14° 20′	14° 02′	7° 49′	7° 17′	7° 08′	5° 48′	4° 54′	3° 37′
	η_d(1400)	–	0.9	0.89	0.86	0.85	0.84	0.79	0.78	0.75	0.72	0.67	0.63
	η_s	–	0.72	0.69	0.63	0.62	0.59	0.48	0.48	0.44	0.41	0.36	0.32
130	Z1	–	4	3	2	2	2	1	1	1	1	1	1
	m	–	6.11	6.45	6.72	5.24	4.28	6.91	5.36	4.35	3.65	2.76	2.23
	γ	–	29° 15′	22° 47′	15° 39′	13° 47′	12° 24′	7° 58′	7° 00′	6° 17′	6° 07′	3° 56′	3° 41′
	η_d(1400)	–	0.91	0.89	0.87	0.86	0.84	0.8	0.78	0.75	0.72	0.68	0.64
	η_s	–	0.72	0.69	0.63	0.61	0.58	0.49	0.46	0.43	0.39	0.34	0.3
150	Z1	–	6	4	3	2	2	2	1	1	1	1	1
	m	–	5.55	6.155	5.55	6.155	5	4.19	6.155	5	4.19	3.16	2.55
	γ	–	29° 37′	24° 41′	15° 32′	12° 56′	11° 19′	9° 56′	6° 34′	5° 43′	5° 00′	3° 45′	2° 52′
	η_d(1400)	–	0.91	0.9	0.88	0.86	0.84	0.83	0.78	0.76	0.73	0.68	0.64
	η_s	–	0.73	0.71	0.66	0.6	0.57	0.54	0.45	0.42	0.39	0.33	0.29

備注：i–速比，Z1–蝸杆头数，γ–导程角，m–模数，η_d–动态效率，η_s–静态效率。
NOTE：i–ratio，Z1–number of teeth，γ–helical angle，m–modulus，η_d–dynamic efficiency，η_s–static efficiency。

NMRV減速機選型表 Gear unit selection tables

NMRV减速机组合表（n_1=1400r/min）
NMRV Possible geometrical combinations（n_1=1400r/min）

NMRV		5	7.5	10	15	20	25	30	40	50	60	80	100
025	60W						NO						
	90W						NO						
030	60W												
	90W												
	120W												
	180W												
040	60W	●	●	●	●	●	●	●	●				
	90W	●	●	●	●	●	●	●	●				
	120W												
	180W												
	250W												
	370W												
	550W												
050	120W	●	●	●	●	●	●	●					
	180W	●	●	●	●	●	●	●					
	250W												
	370W												
	550W												
	750W												
063	250W	X	●	●	●	●	●	●	●	●	●	●	
	370W	X	●	●	●	●	●	●	●				
	550W	X	●	●									
	750W	X											
	1100W	X											
	1500W	X											
075	550W	X	●	●	●	●	●	●					
	750W	X	●	●	●	●	●						
	1100W	X											
	1500W	X											
	2200W	X											
	3000W	X											
	4000W	X											

NMRV減速機選型表 Gear unit selection tables

NMRV		5	7.5	10	15	20	25	30	40	50	60	80	100
090	750W	X	●	●	●	●	●	●	●				
	1100W	X	●	●	●	●	●	●					
	1500W	X	●	●	●	●							
	2200W	X											
	3000W	X											
	4000W	X											
110	1100W	X	●	●	●	●	●	●	●	●			
	1500W	X	●	●	●	●	●	●	●				
	2200W	X											
	3000W	X											
	4000W	X											
	5500W	X											
	7500W	X											
130	1500W	X	●	●	●	●	●	●	●	●	●		
	2200W	X	●	●	●	●	●	●	●				
	3000W	X	●	●	●	●	●	●					
	4000W	X											
	5500W	X											
	7500W	X											
150	2200W	X	●	●	●	●	●	●	●				
	3000W	X	●	●	●	●	●	●					
	4000W	X	●	●	●	●							
	5500W	X	●	●	●								
	7500W	X	●	●	●								
	11000W	X											
	15000W	X											

注：●表示允许但不推荐的配置，空格部分为不允许的配置，X表示无此速比规格。

NOTE：●Means allowed but not recommended configurations,space parts means unallowed configurations, X means no this ratio.

NMRV減速機選型表 Gear unit selection tables

NMRV+ST伺服减速机组合表(n_1=1500r/min)
NMRV+ST Servo gear unit possible geometrical combinations(n_1=1500r/min)

NMRV	ST	5	7.5	10	15	20	25	30	40	50	60	80	100
040	100W												
	200W												
050	100W	●	●	●	●	●	●	●					
	200W	●	●	●	●	●	●	●					
	400W												
	500W												
	750W												
063	200W	X	●	●	●	●	●	●	●	●	●		
	400W	X	●	●	●	●	●	●					
	500W	X	●	●									
	750W	X											
	1000W	X											
	1500W	X											
075	500W	X	●	●	●	●	●	●					
	750W	X	●	●	●	●	●						
	1000W	X											
	1500W	X											
	2000W	X											
	3000W	X											
	4000W	X											
090	750W	X	●	●	●	●	●	●	●				
	1000W	X	●	●	●	●	●	●					
	1500W	X	●	●	●	●							
	2000W	X											
	3000W	X											
	4000W	X											
110	1000W	X	●	●	●	●	●	●	●	●			
	1500W	X	●	●	●	●	●	●	●				
	2000W	X											
	3000W	X											
	4000W	X											
	5000W	X											
	7500W	X											

NMRV減速機選型表 Gear unit selection tables

NMRV	ST	5	7.5	10	15	20	25	30	40	50	60	80	100
130	1500W	X	●	●	●	●	●	●	●	●	●		
	2000W	X	●	●	●	●	●	●	●				
	3000W	X	●	●	●	●	●	●					
	4000W	X											
	5000W	X											
	7500W	X											
150	2000W	X	●	●	●	●	●	●	●				
	3000W	X	●	●	●	●	●	●					
	4000W	X	●	●	●	●							
	5000W	X	●	●	●								
	7500W	X	●	●	●								
	11000W	X											
	15000W	X											

注：●表示允许但不推荐的配置，空格部分为不允许的配置，X表示无此速比规格。
NOTE：●Means allowed but not recommended configurations,space parts means unallowed configurations, X means no this ratio.

NMRV+NEMA减速机组合表 / Possible geometrical combinations

NMRV	NEMA Flange	Available Ratios											
		5	7.5	10	15	20	25	30	40	50	60	80	100
030	48C												
040	56C												
050	56C												
063	56C												
	140TC												
075	56C												
	140TC												
	180TC												
090	56C												
	140TC												
	180TC												
110	56C												
	140TC												
	180TC												
	210TC												
130	56C												
	140TC												
	180TC												
	210TC												
150	180TC												
	210TC												

NMRV減速機選型表 Gear unit selection tables

NMRV...IEC...性能参数 / Performance parameter

P_{1n} (kW)	n_2 (r/min)	i	M_{2n} (Nm)	F_{r2} (N)	fs		
0.06	280	5	1.8	439	6.2	NMRV025 56B14	5614
	186.7	7.5	2.6	503	4.2		
	140	10	3.4	553	3.5		
	93.3	15	4.9	633	2.5		
	70	20	6.2	697	1.9		
	46.7	30	8.3	798	1.6		
	35	40	10	878	1.2		
	28	50	12	946	0.9		
	23.3	60	14	1006	0.7		
	186.7	7.5	2.6	683	7.0	NMRV030 56B5/B14	5614
	140	10	3.4	752	5.4		
	93.3	15	4.7	861	3.9		
	70	20	6	948	3.1		
	56	25	7	1021	3.1		
	46.7	30	8	1085	2.5		
	35	40	9.7	1194	1.9		
	28	50	11	1286	1.5		
	23.3	60	13	1367	1.3		
	17.5	80	14	1504	0.9		
0.09	373.3	7.5	2.0	399	3.9	NMRV025 56B14	5612
	280	10	2.6	439	3.4		
	186.7	15	3.8	503	2.4		
	140	20	4.9	553	1.8		
	93.3	30	6.7	633	1.3		
	70	40	8.5	697	1.1		
	56	50	10	751	0.9		
	186.7	7.5	3.9	503	2.8	NMRV025 56B14	5624
	140	10	5.1	553	2.4		
	93.3	15	7.3	633	1.6		
	70	20	9.3	697	1.3		
	46.7	30	13	798	1.0		
	35	40	16	878	0.8		
	373.3	7.5	2.0	542	6.5	NMRV030 56B5/B14	5612
	280	10	2.6	597	5.0		
	186.7	15	3.7	683	3.5		
	140	20	4.7	752	2.5		
	112	25	5.5	810	2.9		
	93.3	30	6.4	861	2.3		

NMRV減速機選型表 Gear unit selection tables

NMRV...IEC...性能参数 / Performance parameter

P_{1n} (kW)	n_2 (r/min)	i	M_{2n} (Nm)	F_{r2} (N)	fs		
0.09	70	40	8.0	948	1.8	NMRV030 56B5/B14	5612
	56	50	9.4	1021	1.4		
	46.7	60	10	1085	1.1		
	35	80	13	1194	0.9		
	186.7	7.5	3.9	683	4.7	NMRV030 56B5/B14	5624
	140	10	5.0	752	3.6		
	93.3	15	7.0	861	2.6		
	70	20	8.8	948	2.0		
	56	25	10	1021	2.1		
	46.7	30	12	1085	1.7		
	35	40	14	1194	1.2		
	28	50	17	1286	1.0		
	23.3	60	18	1367	0.9		
	28	50	19	2475	2.1	NMRV040 56B5	5624
	23.3	60	21	2630	1.7		
	17.5	80	25	2895	1.3		
	14	100	29	3118	1.0		
0.12	373.3	7.5	2.7	399	3.0	NMRV025 56B14	5622
	280	10	3.5	439	2.6		
	186.7	15	5.1	503	1.8		
	140	20	6.5	553	1.4		
	93.3	30	9.0	633	1.0		
	70	40	11	697	0.8		
	186.7	7.5	5.2	683	3.5	NMRV030 63B5/B14	6314
	140	10	6.6	752	2.7		
	93.3	15	9.3	861	1.9		
	70	20	12	948	1.5		
	56	25	14	1021	1.6		
	46.7	30	16	1085	1.3		
	35	40	19	1194	0.9		
	28	50	22	1286	0.8		
	46.7	30	17	2087	2.7	NMRV040 63B5/B14	6314
	35	40	21	2298	1.9		
	28	50	25	2475	1.6		
	23.3	60	28	2630	1.3		
	17.5	80	33	2895	1.0		
	14	100	38	3118	0.8		
	23.3	60	29	3610	2.3		
	17.5	80	35	3973	1.9		

NMRV減速機選型表 Gear unit selection tables

NMRV...IEC...性能参数 / Performance parameter

P_{2n} (kW)	n_2 (r/min)	i	M_{2n} (Nm)	F_{r2} (N)	fs		
0.12	14	100	39	4280	1.4	NMRV050 63B5	6314
0.18	373.3	7.5	4.0	542	3.2	NMRV030 63B5/B14	6312
	280	10	5.2	597	2.5		
	186.7	15	7.4	683	1.8		
	140	20	9.5	752	1.3		
	112	25	11	810	1.4		
	93.3	30	13	861	1.2		
	70	40	16	948	0.9		
	186.7	7.5	7.7	683	2.3	NMRV030 63B5/B14	6324
	140	10	10	752	1.8		
	93.3	15	14	861	1.3		
	70	20	18	948	1.0		
	56	25	20	1021	1.0		
	46.7	30	24	1085	0.8		
	93.3	30	14	1657	2.5	NMRV040 63B5/B14	6312
	70	40	17	1824	1.8		
	56	50	21	1964	1.4		
	70	20	19	1824	2.1	NMRV040 63B5/B14	6324
	56	25	23	1964	1.7		
	46.7	30	25	2087	1.8		
	35	40	32	2298	1.3		
	28	50	37	2475	1.0		
	23.3	60	42	2630	0.9		
	45	20	28	2113	1.6	NMRV040 71B5/B14	7116
	36	25	34	2276	1.3		
	30	30	38	2419	1.3		
	22.5	40	47	2662	1.0		
	46.7	60	24	2865	2.1	NMRV050 63B5	6312
	35	80	30	3153	1.5		
	28	100	34	3397	1.2		
	35	40	33	3153	2.3	NMRV050 63B5	6324
	28	50	39	3397	1.9		
	23.3	60	43	3610	1.6		
	17.5	80	52	3973	1.2		
	14	100	59	4280	0.9		
	18	50	56	3936	1.4	NMRV050 71B5/B14	7116
	15	60	63	4183	1.1		
	11.3	80	75	4604	0.9		
	15	60	66	5467	2.1	NMRV063 71B5/B14	7116

NMRV減速機選型表 Gear unit selection tables

NMRV...IEC...性能参数 / Performance parameter

P_{2n} (kW)	n_2 (r/min)	i	M_{2n} (Nm)	F_{r2} (N)	fs		
0.18	11.3	80	79	6018	1.6	NMRV063 71B5/B14	7116
	9	100	90	6270	1.4		
0.25	373.3	7.5	5.6	542	2.3	NMRV030 63B5/B14	6322
	280	10	7.2	597	1.8		
	186.7	15	10	683	1.3		
	140	20	13	752	0.9		
	112	25	15	810	1.0		
	93.3	30	18	861	0.8		
	186.7	7.5	11	1315	3.6	NMRV040 71B5/B14	7114
	140	10	14	1447	2.8		
	93.3	15	20	1657	2.0		
	70	20	26	1824	1.5		
	56	25	32	1964	1.2		
	46.7	30	35	2087	1.3		
	35	40	44	2298	0.9		
	120	7.5	17	1524	2.6	NMRV040 71B5/B14	7126
	90	10	22	1677	2.0		
	60	15	31	1920	1.4		
	45	20	39	2113	1.1		
	36	25	48	2276	0.9		
	30	30	53	2419	0.9		
	35	80	42	3153	1.1	NMRV050 63B5/B14	6322
	28	100	48	3397	0.8		
	70	20	27	2503	2.7	NMRV050 71B5/B14	7114
	56	25	32	2696	2.2		
	46.7	30	36	2865	2.3		
	35	40	46	3153	1.7		
	28	50	54	3397	1.4		
	23.3	60	60	3610	1.1		
	17.5	80	72	3973	0.9		
	45	20	40	2900	1.9	NMRV050 71B5/B14	7126
	36	25	48	3124	1.5		
	30	30	54	3320	1.7		
	22.5	40	67	3654	1.2		
	18	50	78	3936	1.0		
	15	60	88	4183	0.8		
	28	50	55	4440	2.4	NMRV063 71B5/B14	7114
	23.3	60	63	4719	2.0		
	17.5	80	76	5193	1.6		

NMRV減速機選型表 Gear unit selection tables

NMRV...IEC...性能参数 / Performance parameter

P_{1n} (kW)	n_2 (r/min)	i	M_{2a} (Nm)	F_{r2} (N)	fs		
0.25	14	100	87	5595	1.4	NMRV063 71B5/B14	7114
	18	50	81	5145	1.8	NMRV063 71B5/B14	7126
	15	60	92	5467	1.5		
	11.3	80	110	6018	1.2		
	9	100	125	6270	1.0		
	17.5	80	80	6130	2.4	NMRV075 71B5	7114
	14	100	94	6603	1.9		
	11.3	80	117	7103	1.7	NMRV075 71B5	7126
	9	100	133	7380	1.4		
0.37	373.3	7.5	8.3	1044	3.4	NMRV040 71B5/B14	7112
	280	10	11	1149	2.6		
	186.7	15	16	1315	1.9		
	140	20	20	1447	1.4		
	112	25	25	1559	1.1		
	186.7	7.5	16	1315	2.5	NMRV040 71B5/B14	7124
	140	10	21	1447	1.9		
	93.3	15	30	1657	1.3		
	70	20	39	1824	1.0		
	56	25	47	1964	0.8		
	46.7	30	52	2087	0.9		
	112	25	25	2140	2.0	NMRV050 71B5/B14	7112
	93.3	30	29	2274	2.2		
	70	40	37	2503	1.6		
	56	50	44	2696	1.2		
	46.7	60	50	2865	1.0		
	35	80	62	3153	0.7		
	140	10	21	1987	3.4	NMRV050 71B5/B14	7124
	93.3	15	31	2274	2.4		
	70	20	39	2503	1.9		
	56	25	47	2696	1.5		
	46.7	30	54	2865	1.6		
	35	40	68	3153	1.1		
	28	50	80	3397	0.9		
	23.3	60	89	3610	0.8		
	120	7.5	25	2091	3.4	NMRV050 80B5/B14	8016
	90	10	33	2302	2.6		
	60	15	47	2635	1.8		
	45	20	59	2900	1.3		
	36	25	72	3124	1.0		

NMRV減速機選型表 Gear unit selection tables

NMRV...IEC...性能参数 / Performance parameter

P_{2n} (kW)	n_2 (r/min)	i	M_{2n} (Nm)	F_{r2} (N)	fs		
0.37	30	30	80	3320	1.1	NMRV050 80B5/B14	8016
	35	40	70	4122	2.1	NMRV063 71B5/B14	7124
	28	50	82	4440	1.6		
	23.3	60	94	4719	1.4		
	17.5	80	113	5193	1.1		
	14	100	129	5595	0.9		
	45	20	60	3791	2.4	NMRV063 80B5/B14	8016
	36	25	73	4084	1.9		
	30	30	82	4339	2.1		
	22.5	40	102	4776	1.6		
	18	50	120	5145	1.2		
	15	60	137	5467	1.0		
	23.3	60	97	5569	2.1	NMRV075 71B5	7124
	17.5	80	119	6130	1.6		
	14	100	139	6603	1.3		
	18	50	124	6073	1.8	NMRV075 80B5/B14	8016
	15	60	141	6453	1.5		
	11.3	80	173	7103	1.2		
	9	100	196	7380	1.0		
	11.3	80	185	7859	1.7	NMRV090 80B5/B14	8016
	9	100	212	8180	1.3		
0.55	373.3	7.5	12	1044	2.3	NMRV040 71B5/B14	7122
	280	10	16	1149	1.8		
	186.7	15	24	1315	1.3		
	140	20	30	1447	1.0		
	112	25	37	1559	0.8		
	140	20	31	1987	1.7	NMRV050 71B5/B14	7122
	112	25	38	2140	1.4		
	93.3	30	43	2274	1.5		
	70	40	55	2503	1.1		
	56	50	65	2696	0.8		
	46.7	60	74	2865	0.7		
	186.7	7.5	24	1805	2.9	NMRV050 80B5/B14	8014
	140	10	32	1987	2.3		
	93.3	15	46	2274	1.6		
	70	20	59	2503	1.2		
	56	25	70	2696	1.0		
	46.7	30	80	2865	1.1		

NMRV減速機選型表 Gear unit selection tables

NMRV...IEC...性能参数 / Performance parameter

P_{2n} (kW)	n_2 (r/min)	i	M_{2n} (Nm)	F_{r2} (N)	fs		
0.55	120	7.5	37	2091	2.3	NMRV050 80B5/B14	8026
	90	10	48	2302	1.7		
	60	15	69	2635	1.2		
	45	20	88	2900	0.9		
	70	40	56	3272	1.9	NMRV063 71B5/B14	7122
	56	50	68	3524	1.5		
	46.7	60	78	3745	1.2		
	35	80	96	4122	0.9		
	28	100	111	4440	0.7		
	70	20	60	3272	2.2	NMRV063 80B5/B14	8014
	56	25	72	3524	1.8		
	46.7	30	82	3745	1.9		
	35	40	104	4122	1.4		
	28	50	122	4440	1.1		
	23.3	60	140	4719	0.9		
	60	15	70	3444	2.2	NMRV063 80B5/B14	8026
	45	20	90	3791	1.6		
	36	25	108	4084	1.3		
	30	30	123	4339	1.4		
	22.5	40	152	4776	1.1		
	35	80	99	4865	1.3	NMRV075 71B5	7122
	28	100	116	5241	1.0		
	35	40	108	4865	2.0	NMRV075 80B5/B14	8014
	28	50	128	5241	1.6		
	23.3	60	144	5569	1.4		
	17.5	80	177	6130	1.1		
	14	100	206	6603	0.9		
	30	30	124	5122	2.1	NMRV075 80B5/B14	8026
	22.5	40	156	5637	1.5		
	18	50	184	6073	1.2		
	15	60	210	6453	1.0		
	.17.5	80	189	6783	1.5	NMRV090 80B5/B14	8014
	14	100	221	7306	1.2		
	18	50	196	6719	2.0	NMRV090 80B5/B14	8026
	15	60	224	7140	1.6		
	11.3	80	275	7859	1.1		
	9	100	315	8180	0.9		
	17.5	80	201	8571	2.6	NMRV110 80B5	8014
	14	100	236	9232	2.0		

NMRV減速機選型表 Gear unit selection tables

NMRV...IEC...性能参数 / Performance parameter

P_{2n} (kW)	n_2 (r/min)	i	M_{2n} (Nm)	F_{r2} (N)	fs		
0.55	11.3	80	294	9931	1.9	NMRV110 80B5	8026
	9	100	344	10320	1.5		
0.75	373.3	7.5	17	1433	3.0	NMRV050 80B5/B14	8012
	280	10	22	1577	2.4		
	186.7	15	31	1805	1.7		
	140	20	41	1987	1.3		
	112	25	49	2140	1.0		
	93.3	30	56	2274	1.1		
	280	5	23	1577	2.7	NMRV050 80B5/B14	8024
	186.7	7.5	33	1805	2.1		
	140	10	43	1987	1.7		
	93.3	15	62	2274	1.2		
	70	20	80	2503	0.9		
	140	20	43	2597	2.3	NMRV063 80B5/B14	8012
	112	25	52	2797	1.8		
	93.3	30	60	2973	2.0		
	70	40	77	3272	1.4		
	56	50	92	3524	1.1		
	46.7	60	106	3745	0.9		
	93.3	15	63	2973	2.2	NMRV063 80B5/B14	8024
	70	20	82	3272	1.6		
	56	25	98	3524	1.3		
	46.7	30	112	3745	1.4		
	35	40	141	4122	1.0		
	120	7.5	51	2734	2.9	NMRV063 90B5/B14	90S6
	90	10	67	3009	2.3		
	60	15	96	3444	1.6		
	45	20	123	3791	1.2		
	36	25	147	4084	0.9		
	30	30	167	4339	1.0		
	46.7	60	107	4421	1.3	NMRV075 90B5/B14	8012
	35	80	135	4865	1.0		
	28	100	159	5241	0.8		
	56	25	101	4160	2.0	NMRV075 90B5/B14	8024
	46.7	30	117	4421	2.0		
	35	40	147	4865	1.5		
	28	50	174	5241	1.2		
	23.3	60	196	5569	1.0		
	60	15	97	4065	2.4	NMRV075 90B5/B14	90S6

NMRV減速機選型表 Gear unit selection tables

NMRV...IEC...性能参数 / Performance parameter

P_{2n} (kW)	n_2 (r/min)	i	M_{2n} (Nm)	F_{r2} (N)	fs		
0.75	45	20	124	4474	1.9	NMRV075 90B5/B14	90S6
	36	25	149	4820	1.4		
	30	30	170	5122	1.5		
	22.5	40	213	5637	1.1		
	35	80	143	5383	1.6	NMRV090 80B5/B14	8012
	28	100	169	5799	1.2		
	28	50	182	5799	1.9	NMRV090 80B5/B14	8024
	23.3	60	209	6163	1.5		
	17.5	80	258	6783	1.1		
	14	100	302	7306	0.9		
	30	30	179	5667	2.6	NMRV090 80B5/B14	90S6
	22.5	40	226	6238	1.8		
	18	50	267	6719	1.5		
	15	60	306	7140	1.1		
	17.5	80	274	8571	1.9	NMRV110 80B5	8024
	14	100	322	9232	1.5		
	15	60	325	9023	2.1	NMRV110 90B5	90S6
	11.3	80	401	9931	1.4		
	9	100	470	10320	1.1		
	11.3	80	401	12989	2.1	NMRV130 90B5	90S6
	9	100	470	13500	1.7		
1.1	373.3	7.5	25	1433	2.1	NMRV050 80B5/B14	8022
	280	10	33	1577	1.7		
	186.7	15	48	1805	1.2		
	140	20	62	1987	0.9		
	186.7	15	46	2359	2.1	NMRV063 80B5/B14	8022
	140	20	60	2597	1.6		
	112	25	72	2797	1.2		
	93.3	30	82	2973	1.4		
	70	40	104	3272	1.0		
	120	7.5	75	2734	2.0	NMRV063 90B5/B14	90L6
	90	10	98	3009	1.6		
	60	15	140	3444	1.1		
	45	20	180	3791	0.8		
	186.7	7.5	50	2359	2.6	NMRV063 90B5/B14	90S4
	140	10	65	2597	2.0		
	93.3	15	92	2973	1.5		
	70	20	120	3272	1.1		
	56	25	144	3524	0.9		

NMRV減速機選型表 Gear unit selection tables

NMRV...IEC...性能参数 / Performance parameter

P_{2n} (kW)	n_2 (r/min)	i	M_{2n} (Nm)	F_{r2} (N)	fs		
1.1	46.7	30	164	3745	1.0	NMRV063 90B5/B14	90S4
	112	25	77	3302	2.0	NMRV075 80B5/B14	8022
	93.3	30	89	3509	1.9		
	70	40	114	3862	1.4		
	56	50	137	4160	1.1		
	46.7	60	158	4421	0.9		
	90	10	98	3551	2.3	NMRV075 90B5/B14	90L6
	60	15	142	4065	1.7		
	45	20	182	4474	1.3		
	36	25	19	4820	1.0		
	30	30	249	5122	1.0		
	93.3	15	95	3509	2.1	NMRV075 90B5/B14	90S4
	70	20	122	3862	1.7		
	56	25	148	4160	1.3		
	46.7	30	171	4421	1.3		
	35	40	216	4865	1.0		
	35	80	210	5383	1.1	NMRV090 80B5/B14	8022
	28	100	248	5799	0.8		
	36	25	228	5333	1.6	NMRV090 90B5/B14	90L6
	30	30	263	5667	1.8		
	22.5	40	331	6238	1.2		
	18	50	391	6719	1.0		
	15	60	448	7140	0.8		
	35	40	222	5383	1.6	NMRV090 90B5/B14	90S4
	28	50	266	5799	1.3		
	23.3	60	306	6163	1.0		
	22.5	40	345	7882	2.3	NMRV110 90B5	90L6
	18	50	414	8491	1.8		
	15	60	476	9023	1.4		
	11.3	80	588	9931	1.0		
	28	50	278	7328	2.4	NMRV110 90B5	90S4
	23.3	60	324	7787	1.9		
	17.5	80	402	8571	1.3		
	14	100	473	9232	1.0		
	11.3	80	588	12989	1.5	NMRV130 90B5	90L6
	9	100	689	13500	1.1		
	17.5	80	408	11210	2.1	NMRV130 90B5	90S4
	14	100	480	12076	1.5		

NMRV減速機選型表 Gear unit selection tables

NMRV...IEC...性能参数 / Performance parameter

P_{1n} (kW)	n_2 (r/min)	i	M_{2n} (Nm)	F_{r2} (N)	fs		
1.5	373.3	7.5	34	1433	1.5	NMRV050 80B5/B14	8032
	280	10	45	1577	1.2		
	186.7	15	65	1805	0.9		
	186.7	7.5	68	2359	1.9	NMRV063 90B5/B14	90L4
	140	10	88	2597	1.5		
	93.3	15	126	2973	1.1		
	70	20	164	3272	0.8		
	373.3	7.5	35	1873	2.7	NMRV063 90B5/B14	90S2
	280	10	45	2061	2.2		
	186.7	15	66	2359	1.6	NMRV063 90B5/B14	90S2
	140	20	86	2597	1.2		
	112	25	105	2797	0.9		
	93.3	30	120	2973	1.0		
	120	7.5	103	3227	2.1	NMRV075 100B5/B14	100L6
	90	10	134	3551	1.7		
	60	15	193	4065	1.2		
	56	50	187	4160	1.3	NMRV075 90B5/B14	90S2
	46.7	60	215	4421	1.1		
	140	10	89	3065	2.2	NMRV075 90B5/B14	90L4
	93.3	15	129	3509	1.6		
	70	20	166	3862	1.3		
	56	25	202	4160	1.0		
	46.7	30	233	4421	1.0		
	280	10	45	2433	3.2	NMRV075 90B5/B14	90S2
	186.7	15	66	2785	2.3		
	140	20	86	3065	1.9		
	112	25	105	3302	1.4		
	93.3	30	121	3509	1.4		
	70	40	156	3862	1.1		
	90	10	137	3929	2.7	NMRV090 100B5/B14	100L6
	60	15	198	4498	2.1		
	45	20	258	4951	1.5		
	36	25	310	5333	1.2		
	30	30	358	5667	1.3		
	70	20	170	4273	2.1	NMRV090 90B5/B14	90L4
	56	25	207	4603	1.6		
	46.7	30	239	4891	1.7		
	35	40	303	5383	1.2		
	28	50	363	5799	0.9		

NMRV減速機選型表 Gear unit selection tables

NMRV...IEC...性能参数 / Performance parameter

P_{1n} (kW)	n_2 (r/min)	i	M_{2n} (Nm)	F_{r2} (N)	fs		
1.5	23.3	60	417	6163	0.8	NMRV090 90B5/B14	90L4
	56	50	197	4603	1.3	NMRV090 90B5/B14	90S2
	46.7	60	227	4891	1.1		
	45	20	264	6256	2.7	NMRV110 100B5/B14	100L6
	36	25	322	6739	2.4		
	30	30	363	7161	2.3		
	22.5	40	471	7882	1.7		
	18	50	565	8491	1.3		
	15	60	649	9023	1.1		
	35	40	315	6803	2.2	NMRV110 90B5	90L4
	28	50	379	7328	1.7		
	23.3	60	442	7787	1.4		
	17.5	80	548	8571	0.9		
	46.7	60	236	6181	2.0	NMRV110 90B5	90S2
	35	80	299	6803	1.3		
	28	100	358	7328	1.0		
	22.5	40	471	10309	2.3	NMRV130 100B5	100L6
	18	50	565	11105	1.9		
	15	60	659	11801	1.4		
	11.3	80	802	12989	1.1		
	17.5	80	557	11210	1.5	NMRV130 90B5	90L4
	14	100	655	12076	1.1		
2.2	373.3	7.5	51	1873	1.8	NMRV063 90B5/B14	90L2
	280	10	66	2061	1.5		
	186.7	15	97	2359	1.1		
	186.7	7.5	99	2785	1.9	NMRV075 100B5/B14	100L1-4
	140	10	131	3065	1.5		
	93.3	15	189	3509	1.1		
	373.3	7.5	50	2210	2.6	NMRV075 90B5/B14	90L2
	280	10	66	2433	2.2		
	186.7	15	97	2785	1.5		
	140	20	126	3065	1.3		
	112	25	154	3302	1.0	NMRV075 100B5/B14	90L2
	93.3	30	178	3509	1.0		
	186.7	7.5	100	3081	2.9	NMRV090 100B5/B14	100L1-4
	140	10	132	3391	2.3		
	93.3	15	191	3882	1.9		
	70	20	249	4273	1.4		

NMRV減速機選型表 Gear unit selection tables

NMRV...IEC...性能参数 / Performance parameter

P_{2n} (kW)	n_2 (r/min)	i	M_{2n} (Nm)	F_{r2} (N)	fs		
2.2	56	25	304	4603	1.1	NMRV090 100B5/B14	100L1-4
	46.7	30	351	4891	1.2		
	120	7.5	154	3570	2.2	NMRV090 112B5/B14	112M6
	90	10	201	3929	1.8		
	60	15	291	4498	1.4		
	45	20	378	4951	1.0		
	140	20	129	3391	2.0	NMRV090 90B5/B14	90L2
	112	25	159	3653	1.6		
	93.3	30	185	3882	1.7		
	70	40	237	4273	1.2		
	56	50	289	4603	0.9		
	70	20	255	5399	2.5	NMRV110 100B5	100L1-4
	56	25	311	5816	2.2		
	46.7	30	356	6181	2.0		
	35	40	462	6803	1.5		
	28	50	555	7328	1.2		
	23.3	60	648	7787	1.0		
	90	10	203	4965	3.5	NMRV110 112B5	112M6
	60	15	294	5684	2.6		
	45	20	388	6256	1.9		
	36	25	473	6739	1.6		
	30	30	532	7161	1.6		
	112	25	161	4616	3.1	NMRV110 90B5	90L2
	93.3	30	187	4905	3.0		
	70	40	243	5399	2.2		
	56	50	296	5816	1.7		
	46.7	60	347	6181	1.4		
	35	40	468	8897	2.2	NMRV130 100B5	100L1-4
	28	50	563	9584	1.7		
	23.3	60	657	10185	1.4		
	17.5	80	816	11210	1.0		
	36	25	473	8814	2.2	NMRV130 112B5	112M6
	30	30	539	9366	2.2		
	22.5	40	691	10309	1.6		
	18	50	829	11105	1.3		
	15	60	966	11801	1.0		
	35	80	444	8897	1.3	NMRV130 90B5	90L2
	28	100	525	9584	1.0		
	28	50	570	13103	2.5	NMRV150 100B5	100L1-4

NMRV減速機選型表 Gear unit selection tables

◆ NMRV...IEC...性能参数 Performance parameter

P_{1n} (kW)	n_2 (r/min)	i	M_{2n} (Nm)	F_{r2} (N)	fs		
2.2	23.3	60	657	13924	1.9	NMRV150 100B5	100L1-4
	17.5	80	816	15325	1.4		
	14	100	960	16508	1.0		
3.0	373.3	7.5	68	2210	1.9	NMRV075 100B5/B14	100L2
	280	10	90	2433	1.6		
	186.7	7.5	135	2785	1.4	NMRV075 100B5/B14	100L2-4
	140	10	178	3065	1.1		
	93.3	15	258	3509	0.8		
	373.3	7.5	70	2446	3.0	NMRV090 100B5/B14	100L2
	280	10	92	2692	2.6		
	186.7	7.5	137	3081	2.1	NMRV090 100B5/B14	100L2-4
	140	10	180	3391	1.7		
	93.3	15	261	3882	1.4		
	70	20	340	4273	1.0		
	56	25	414	4603	0.8		
	46.7	30	479	4891	0.9		
	93.3	15	264	4905	2.5	NMRV110 100B5	100L2-4
	70	20	348	5399	1.9		
	56	25	425	5816	1.6		
	46.7	30	485	6181	1.5		
	35	40	630	6803	1.1		
	28	50	757	7328	0.9		
	120	7.5	210	4511	3.1	NMRV110 100B5	132S6
	90	10	277	4965	2.6		
	60	15	401	5684	1.9		
	45	20	528	6256	1.4		
	56	25	430	7607	2.2	NMRV130 100B5	100L2-4
	46.7	30	491	8084	2.1		
	35	40	638	8897	1.6		
	28	50	767	9584	1.3		
	23.3	60	896	10185	1.0		
	17.5	80	1113	11210	0.8		
	90	10	277	6494	3.5	NMRV130 132B5	132S6
	60	15	406	7434	2.6		
	45	20	528	8182	2.0		
	36	25	645	8814	1.6		
	30	30	735	9366	1.6		
	22.5	40	942	10309	1.2		

NMRV減速機選型表 Gear unit selection tables

◆ NMRV...IEC...性能参数 Performance parameter

P_{1n} (kW)	n_2 (r/min)	i	M_{2n} (Nm)	F_{r2} (N)	fs		
3.0	28	50	778	13103	1.8	NMRV150 100B5	100L2-4
	23.3	60	896	13924	1.4		
	17.5	80	1113	15325	1.0		
	14.0	100	1310	16508	0.8		
4.0	373.3	7.5	91	2210	1.4	NMRV075 112B5/B14	112M2
	280	10	120	2433	1.2		
	186.7	7.5	180	2785	1.0	NMRV075 112B5/B14	112M4
	140	10	237	3065	0.8		
	373.3	7.5	93	2446	2.3	NMRV090 112B5/B14	112M2
	280	10	123	2692	1.9		
	186.7	7.5	182	3081	1.6	NMRV090 112B5	112M4
	140	10	240	3391	1.3		
	93.3	15	348	3882	1.0		
	70	20	453	4273	0.8		
	140	10	240	4285	2.5	NMRV110 112B5	112M4
	93.3	15	352	4905	1.9		
	70	20	464	5399	1.4		
	56	25	566	5816	1.2		
	46.7	30	647	6181	1.1		
	120	7.5	280	4511	2.3	NMRV110 132B5	132M1-6
	90	10	369	4965	1.9		
	60	15	535	5684	1.4		
	56	25	573	7607	1.6	NMRV130 112B5	112M4
	46.7	30	655	8084	1.6		
	35	40	851	8897	1.2		
	28	50	1023	9584	1.0		
	23.3	60	1195	10185	0.8		
	120	7.5	283	5901	3.1	NMRV130 132B5	132M1-6
	90	10	369	6494	2.6		
	60	15	541	7434	2.0		
	45	20	705	8182	1.5		
	36	25	860	8814	1.2		
	28	50	1037	13103	1.4	NMRV150 112B5	112M4
	23.3	60	1195	13924	1.1		
	17.5	80	1484	15325	0.8		
5.5	186.7	7.5	250	3893	2.2	NMRV110 132B5	132S4
	140	10	330	4285	1.8		
	93.3	15	484	4905	1.4		
	70	20	638	5399	1.0		

NMRV減速機選型表 Gear unit selection tables

◆ NMRV...IEC...性能参数 Performance parameter

P_{1n} (kW)	n_2 (r/min)	i	M_{2n} (Nm)	F_{r2} (N)	fs		
5.5	140	10	334	5605	2.5	NMRV130 132B5	132S4
	93.3	15	490	6416	1.9		
	70	20	638	7062	1.4		
	56	25	788	7607	1.2		
	46.7	30	900	8084	1.2		
	35	40	1171	8897	0.9		
	70	20	645	9654	2.0	NMRV150 132B5	132S4
	56	25	788	10400	1.5		
	46.7	30	934	11051	1.3		
	35.0	40	1171	12163	1.3		
	28.0	50	1426	13103	1.0		
	23.3	60	1643	13924	0.8		
7.5	186.7	7.5	341	3893	1.6	NMRV110 132B5	132M4
	140	10	450	4285	1.3		
	93.3	15	660	4905	1.0		
	186.7	7.5	345	5092	2.2	NMRV130 132B5	132M4
	140	10	455	5605	1.8		
	93.3	15	668	6416	1.4		
	70	20	870	7062	1.0		
	56	25	1074	7607	0.9		
	46.7	30	1228	8084	0.8		
	35	40	1596	8897	0.7		
	70	20	880	9654	1.5	NMRV150 132B5	132M4
	56	25	1074	10400	1.1		
	46.7	30	1274	11051	0.9		
	35	40	1596	12163	1.0		
11	186.7	7.5	512	6962	2.3	NMRV150 160B5	160M4
	140	10	675	7663	1.8		
	93.3	15	990	8771	1.3		
	70	20	1291	9654	1.0		
	56	25	1576	10400	0.8		
15	186.7	7.5	698	6962	1.7	NMRV150 160B5	160L4
	140	10	921	7663	1.3		
	93.3	15	1351	8771	0.9		
	70	20	1760	9654	0.7		

DRV减速機型式 DRV deceleration type

NMRV减速机本身可以组合成一个双级联体减速机（DRV）。DRV的传动比即为第一级NMRV和第二级NMRV传动比的乘积，可将传动比拓展至i=100-5000的范围。
DRV并不是两个NMRV的简单组合，合理的组合应使两个减速机达到一致的工况。因此第二级减速机的机座规格要大于第一级减速机的机座规格。

NMRV reducers can be combined as a double reducers combination (DRV). The ratio of DRV is just the product of the first stage NMRV' s ratio. So the ratio can be extended to i=100-5000.
DRV is not only simply combination of two NMRV reducers.the reasonably combinations should make two reducers operating at same condition.therefore the frame size of the second stage reducer should be bigger than the first stage reducer.

DRV减速機選型表 Gear unit selection tables

◆ DRV减速机组合表 DRV Possible unit selection tables

NMRV+NMRV	i=i1*i2	100	150	200	250	300	400	500	600	750	900
	n2	14	9.3	7	5.6	4.7	3.5	2.8	2.3	1.9	1.6
DRV025/030	0.06kW		10*15	10*20	10*25	10*30	20*20	20*25	20*30	30*25	30*30
	0.09kW	10*10									
DRV025/040	0.06kW					10*30	10*40	20*25	20*30	30*25	30*30
DRV030/040	0.06kW					10*30	10*40	20*25	20*30	25*30	30*30
	0.09kW					10*30					
DRV030/050	0.06kW										30*30
	0.09kW						10*40	10*50	20*30	25*30	30*30
	0.12kW					10*30	10*40	10*50			
	0.18kW					10*30					
DRV030/063	0.06kW										
	0.09kW										15*60
	0.12kW							10*50	15*40	15*50	
	0.18kW					7.5*40	10*40	10*50			
DRV040/075	0.06kW										
	0.09kW										
	0.12kW										30*30
	0.18kW								20*30	25*30	30*30
	0.25kW					10*30	10*40	10*50			
	0.37kW					10*30	10*40				
DRV040/090	0.06kW										
	0.09kW										
	0.12kW										
	0.18kW										15*60
	0.25kW								15*40	15*50	15*60
	0.37kW					7.5*40	10*40	10*50	15*40		
DRV050/110	0.12kW										
	0.18kW										
	0.25kW										
	0.37kW									25*30	30*30
	0.55kW					10*30	10*40	10*50	15*40	25*30	
	0.75kW					10*30	10*40				
DRV063/130	0.25kW										
	0.37kW										
	0.55kW							10*50		25*30	
	0.75kW							10*50	15*40	25*30	30*30
	1.1kW					10*30	10*40	10*50			
	1.5kW					10*30	10*40				
DRV063/150	0.25kW										
	0.37kW										
	0.55kW										
	0.75kW							10*50	15*40	25*30	30*30
	1.1kW		10*15	10*20	10*25	10*30	10*40	10*50	15*40	25*30	
	1.5kW		10*15	10*20	10*25	10*30	10*40	10*50	15*40		

DRV減速機選型表 Gear unit selection tables

◆ DRV减速机组合表 DRV Possible unit selection tables

NMRV+NMRV	i=i1*i2	1200	1500	1800	2400	3000	3200	4000	4800	5000
	n2	1.2	0.93	0.78	0.58	0.47	0.44	0.35	0.29	0.28
DRV025/030	0.06kW	40*30	50*30	60*30	60*40	60*50				
	0.09kW									
DRV025/040	0.06kW	40*30	50*30	60*30	60*40	60*50		50*80		50*100
DRV030/040	0.06kW	30*40	50*30	60*30	60*40	60*50	80*40	80*50		50*100
	0.09kW									
DRV030/050	0.06kW	30*40	50*30	60*30	60*40	60*50		80*50	80*60	
	0.09kW									
	0.12kW									
	0.18kW									
DRV030/063	0.06kW		30*50	30*60	60*40	60*50		80*50		50*100
	0.09kW	30*40	30*50							
	0.12kW									
	0.18kW									
DRV040/075	0.06kW				60*40	60*50		80*50		100*50
	0.09kW		50*30	60*30	60*40					
	0.12kW	30*40								
	0.18kW									
	0.25kW									
	0.37kW									
DRV040/090	0.06kW					60*50		80*50		100*50
	0.09kW				60*40	60*50		80*50		
	0.12kW		30*50	30*60	60*40					
	0.18kW	30*40	30*50							
	0.25kW									
	0.37kW									
DRV050/110	0.12kW					60*50		80*50		100*50
	0.18kW			60*30	60*40					
	0.25kW	30*40	50*30	60*30						
	0.37kW	30*40								
	0.55kW									
	0.75kW									
DRV063/130	0.25kW				60*40	60*50		80*50		100*50
	0.37kW	30*40	50*30	60*30						
	0.55kW	30*40								
	0.75kW									
	1.1kW									
	1.5kW									
DRV063/150	0.25kW			60*30	60*40	60*50		80*50		100*50
	0.37kW			60*30	60*40	60*50				
	0.55kW			60*30	60*40					
	0.75kW	30*40								
	1.1kW									
	1.5kW									

DRV性能參數 Performance parameter

P_{1n} (kW)	n_2 (r/min)	i	M_{2n} (Nm)	F_{r2} (N)	fs		
0.06	14.0	100	25	1620	1.3	DRV025/030	5614
	9.3	150	33	1830	0.9		
	7.0	200	41	1830	0.7		
	5.6	250	45	1830	0.8		
	4.7	300	56	3490	1.2	DRV025/040	5614
	3.5	400	69	3490	0.9		
	2.8	500	94	3490	0.7		
	2.3	600	100	3490	0.6		
	1.9	750	115	3490	0.5		
	1.6	900	125	3490	0.5		
	1.2	1200	153	3490	0.4		
	0.9	1500	185	3490	0.3		
	0.8	1800	198	3490	0.3		
	0.6	2400	247	3490	0.2		
	0.5	3000	280	3490	0.2		
	0.4	4000	295	3490	0.1		
	0.3	5000	348	3490	0.1		
	4.7	300	55	3490	1.3	DRV030/040	5614
	3.5	400	67	3490	0.9		
	2.8	500	88	3490	0.6		
	2.3	600	95	3490	0.7		
	1.9	750	103	3490	0.6		
	1.6	900	118	3490	0.5		
	1.2	1200	143	3490	0.4		
	0.9	1500	166	3490	0.4		
	0.8	1800	184	3490	0.3		
	0.6	2400	217	3490	0.2		
	0.4	3200	247	3490	0.2		
	0.4	4000	278	3490	0.1		
	0.3	5000	327	3490	0.1		
	1.6	900	118	4840	1.0	DRV030/050	5614
	1.2	1200	143	4840	0.7		
	0.9	1500	166	4840	0.7		
	0.8	1800	184	4840	0.7		
	0.6	2400	227	4840	0.5		
	0.5	3000	256	4840	0.4		
	0.4	4000	278	4840	0.3		
	0.3	4800	316	4840	0.3		

DRV性能參數 Performance parameter

P_{2n} (kW)	n_2 (r/min)	i	M_{2n} (Nm)	F_{r2} (N)	fs		
0.06	0.9	1500	173	6270	1.1	DRV030/063	5614
	0.8	1800	191	6270	0.9		
	0.6	2400	227	6270	0.8		
	0.5	3000	256	6270	0.7		
	0.4	4000	295	6270	0.6		
	0.3	5000	327	6270	0.4		
	0.6	2400	267	7380	1.1	DRV040/075	5614
	0.5	3000	305	7380	0.8		
	0.4	4000	360	7380	0.7		
	0.3	5000	409	7380	0.5		
	0.5	3000	329	8180	1.4	DRV040/090	5614
	0.4	4000	393	8180	1.3		
	0.3	5000	430	8180	1.0		
0.09	28.0	100	18	1286	1.6	DRV025/030	5612
	18.7	150	25	1472	1.1		
	14.0	200	31	1620	0.9		
	14.0	100	37	1620	0.8	DRV025/030	5624
	9.3	150	50	1830	0.6		
	7.0	200	61	1830	0.5		
	5.6	250	68	1830	0.5		
	4.7	300	77	1830	0.4		
	3.5	400	106	1830	0.3		
	2.8	500	117	1830	0.3		
	2.3	600	135	1830	0.2		
	1.9	750	149	1830	0.2		
	1.6	900	167	1830	0.2		
	1.2	1200	201	1830	0.1		
	0.9	1500	231	1830	0.1		
	0.8	1800	264	1830	0.1		
	0.6	2400	311	1830	0.1		
	0.5	3000	347	1830	0.1		
	9.3	300	43	3490	1.6	DRV025/040	5612
	7.0	400	52	3490	1.2		
	5.6	500	71	3490	0.8		
	4.7	300	82	3490	0.8	DRV030/040	5624
	3.5	400	103	4840	1.2	DRV030/050	5624
	2.8	500	120	4840	1.0		
	2.3	600	146	4840	0.9		
	1.9	750	158	4840	0.8		

DRV性能參數 Performance parameter

P_{1n} (kW)	n_2 (r/min)	i	M_{2n} (Nm)	F_{r2} (N)	fs		
0.09	1.6	900	177	4840	0.7	DRV030/050	5624
	1.6	900	188	6270	1.0	DRV030/063	5624
	1.2	1200	222	6270	0.9		
	0.9	1500	259	6270	0.7		
	0.9	1500	305	7380	1.1	DRV040/075	5624
	0.8	1800	331	7380	1.0		
	0.6	2400	400	7380	0.7		
	0.5	3000	494	8180	0.9	DRV040/090	5624
	0.4	4000	589	8180	0.8		
0.12	4.7	300	112	4840	1.2	DRV030/050	6314
	3.5	400	138	4840	0.9		
	2.8	500	160	4840	0.7		
	2.8	500	168	6270	1.3	DRV030/063	6314
	2.3	600	199	6270	1.1		
	1.9	750	217	6270	0.9		
	1.6	900	279	7380	1.2	DRV040/075	6314
	1.2	1200	344	7380	0.9		
	0.8	1800	470	8180	0.9	DRV040/090	6314
	0.6	2400	593	8180	0.9		
	0.5	3000	731	10320	1.2	DRV050/110	6314
	0.4	4000	884	10320	1.0		
	0.3	5000	1023	10320	0.8		
0.18	3.5	400	216	6270	1.0	DRV030/063	6324
	2.8	500	252	6270	0.8		
	2.3	600	336	7380	1.1	DRV040/075	6324
	1.9	750	371	7380	0.9		
	1.6	900	419	7380	0.8		
	1.2	1200	544	8180	1.0	DRV040/090	6324
	0.9	1500	647	8180	0.8		
	0.8	1800	727	10320	1.5	DRV050/110	6324
	0.6	2400	948	10320	1.1		
0.25	7.0	400	150	6270	1.4	DRV030/063	6322
	5.6	500	175	6270	1.2		
	3.5	400	321	7380	1.1	DRV040/075	7114
	2.8	500	375	7380	0.8		
	2.3	600	488	8180	1.2	DRV040/090	7114
	1.9	750	553	8180	0.9		
	1.6	900	612	8180	0.8		
	1.2	1200	776	10320	1.3	DRV050/110	7114

DRV性能參數 Performance parameter

P_{1n} (kW)	n_2 (r/min)	i	M_{2n} (Nm)	F_{r2} (N)	fs		
0.25	0.9	1500	924	10320	1.2	DRV050/110	7114
	0.8	1800	1010	10320	1.1		
	0.6	2400	1358	13500	1.0	DRV063/130	7114
	0.5	3000	1626	13500	0.8		
	0.4	4000	1910	13500	0.6		
	0.3	5000	2132	13500	0.5		
	0.8	1800	1199	18000	1.8	DRV063/150	7114
	0.6	2400	1446	18000	1.8		
	0.5	3000	1713	18000	1.4		
	0.4	4000	2026	18000	0.9		
	0.3	5000	2251	18000	0.7		
0.37	9.3	300	182	6270	1.3	DRV030/063	7112
	7.0	400	222	6270	1.0		
	4.7	300	383	7380	1.0	DRV040/075	7124
	3.5	400	474	7380	0.7		
	4.7	300	406	8180	1.5	DRV040/090	7124
	3.5	400	505	8180	1.2		
	2.8	500	593	8180	0.9		
	2.3	600	722	8180	0.8		
	1.9	750	837	10320	1.3	DRV050/110	7124
	1.6	900	928	10320	1.2		
	1.2	1200	1148	10320	0.8		
	0.9	1500	1444	13500	1.1	DRV063/130	7124
	0.8	1800	1586	13500	0.9		
	0.8	1800	1775	18000	1.2	DRV063/150	7124
	0.6	2400	2141	18000	1.2		
	0.5	3000	2535	18000	0.9		
0.55	9.3	300	305	8180	2.0	DRV040/090	7122
	7.0	400	375	8180	1.5		
	5.6	500	441	8180	1.2		
	4.7	300	615	10320	2.0	DRV050/110	8014
	3.5	400	810	10320	1.4		
	2.8	500	938	10320	1.1		
	2.3	600	1096	10320	1.0		
	1.9	750	1244	10320	0.9		
	2.8	500	957	13500	1.6	DRV063/130	8014
	1.9	750	1382	13500	1.2		
	1.2	1200	2057	13500	0.8		
	0.8	1800	2638	18000	0.8	DRV063/150	8014
	0.6	2400	3182	18000	0.6		

DRV性能參數 Performance parameter

P_{2n} (kW)	n_2 (r/min)	i	M_{2n} (Nm)	F_{r2} (N)	fs		
0.75	9.3	300	424	10320	2.8	DRV050/110	8012
	7.0	400	553	10320	2.1		
	5.6	500	640	10320	1.6		
	4.7	300	838	10320	1.5	DRV050/110	8024
	3.5	400	1105	10320	1.1		
	2.8	500	1305	13500	1.1	DRV063/130	8024
	2.3	600	1557	13500	1.0		
	1.9	750	1772	13500	0.9		
	1.6	900	2014	13500	0.8		
	2.8	500	1291	18000	1.8	DRV063/150	8024
	2.3	600	1529	18000	1.7		
	1.9	750	1783	18000	1.3		
	1.6	900	2215	18000	0.9		
	1.2	1200	2680	18000	1		
1.1	9.3	300	621	10320	1.9	DRV050/110	8022
	7.0	400	810	10320	1.4		
	5.6	500	938	10320	1.1		
	4.7	300	1274	13500	1.3	DRV063/130	90S4
	3.5	400	1621	13500	1.0		
	2.8	500	1913	13500	0.8		
	9.3	150	753	18000	3.1	DRV063/150	90S4
	7	200	966	18000	2.4		
	5.6	250	1175	18000	1.7		
	4.7	300	1364	18000	1.7		
	3.5	400	1619	18000	1.6		
	2.8	500	1893	18000	1.2		
	2.3	600	2242	18000	1.2		
	1.9	750	2616	18000	0.9		
1.5	9.3	300	878	13500	1.9	DRV063/130	90S2
	7.0	400	1105	13500	1.4		
	5.6	500	1305	13500	1.1		
	4.7	300	1737	13500	1.0	DRV063/130	90L4
	3.5	400	2210	13500	0.7		
	9.3	150	1026	18000	2.3	DRV063/150	90L4
	7	200	1317	18000	1.8		
	5.6	250	1602	18000	1.3		
	4.7	300	1860	18000	1.3		
	3.5	400	2208	18000	1.2		
	2.8	500	2582	18000	0.9		
	2.3	600	3057	18000	0.9		

NRV 025

單級蝸輪減速機
Single stage worm reducer
單軸輸入/雙軸輸入
減速比1:5~60

外形尺寸 Dimension

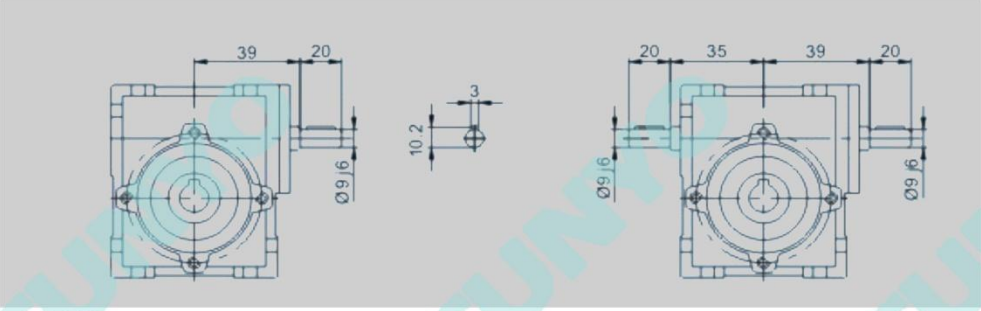

◆ 输出轴 Output shaft

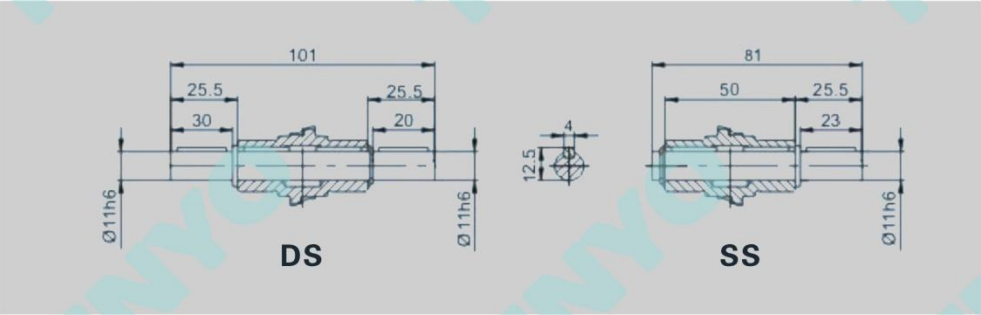

◆ 输出法兰 Output flange

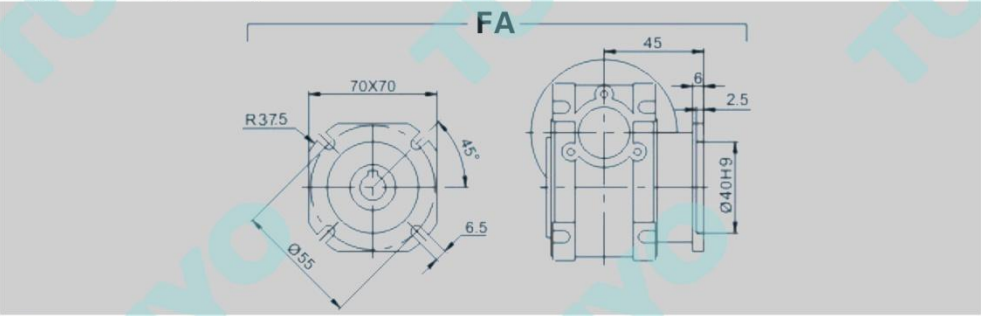

Weight:1.3kg

NRV 030

單級蝸輪減速機
Single stage worm reducer
單軸輸入/雙軸輸入
減速比1:5~80

外形尺寸 Dimension

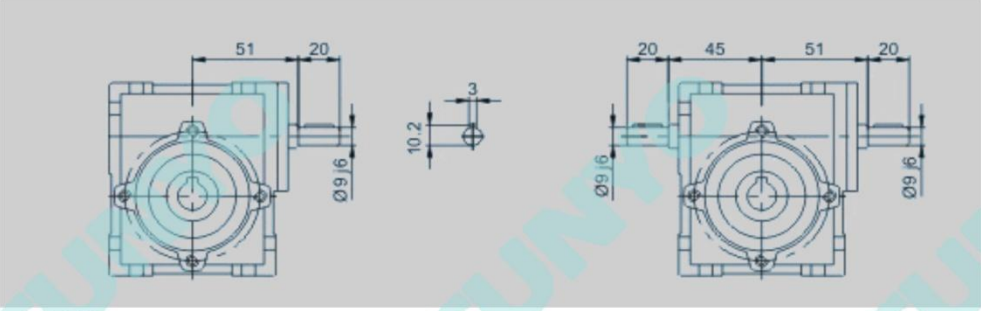

◆ 输出轴 Output shaft

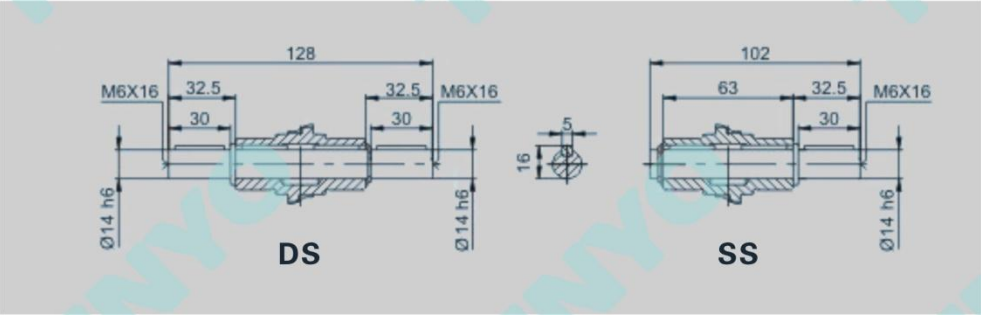

◆ 输出法兰 Output flange

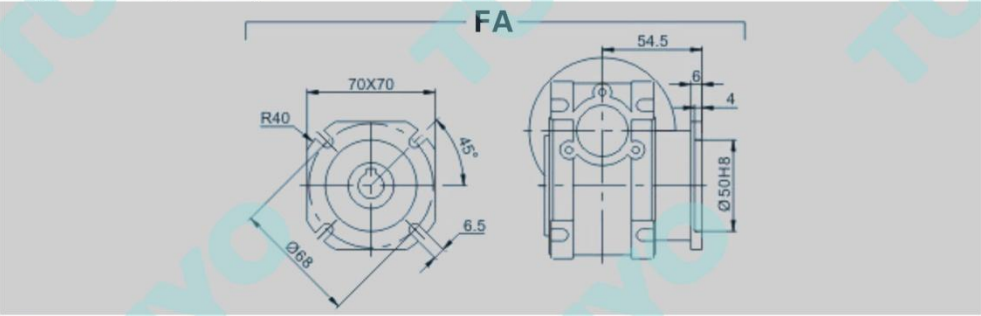

Weight:1.3kg

NRV 040

單級蝸輪減速機
Single stage worm reducer
單軸輸入/雙軸輸入
減速比1:5~100

外形尺寸 Dimension

◆ 輸出軸 Output shaft

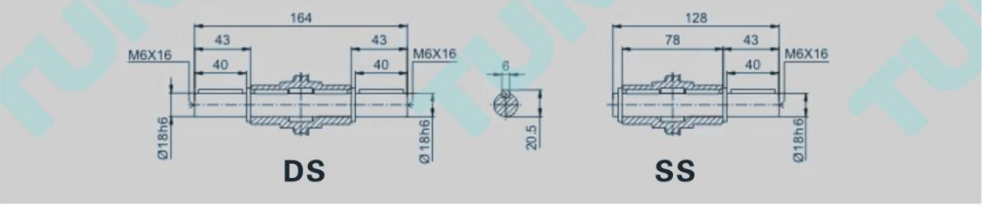

◆ 輸出法兰 Output flange

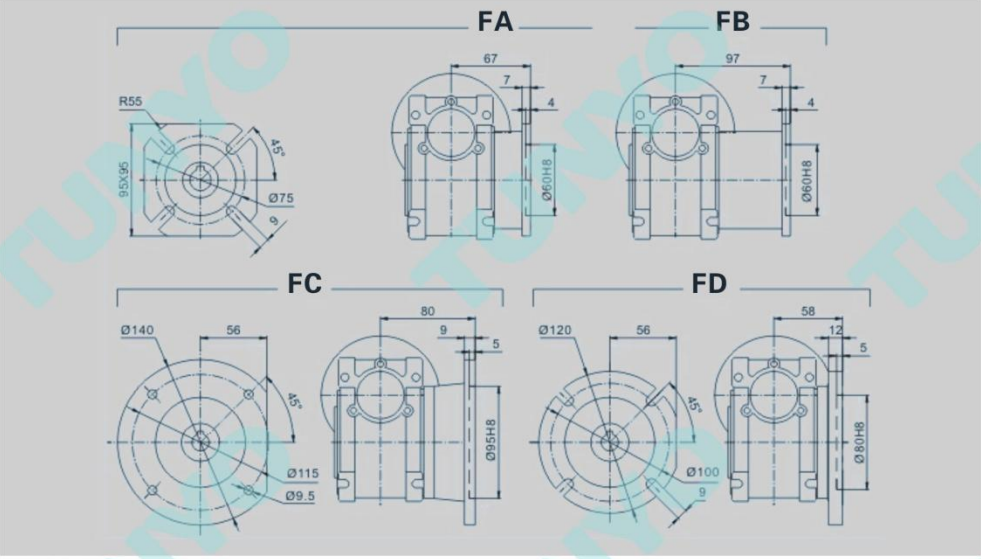

Weight : 2. 4kg

NRV 050

單級蝸輪減速機
Single stage worm reducer
單軸輸入/雙軸輸入
減速比1:5~100

外形尺寸 Dimension

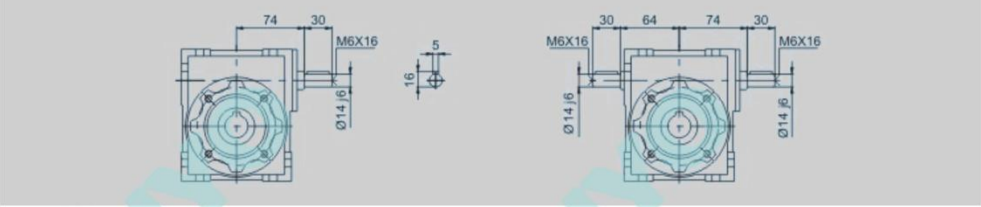

◆ 输出轴 Output shaft

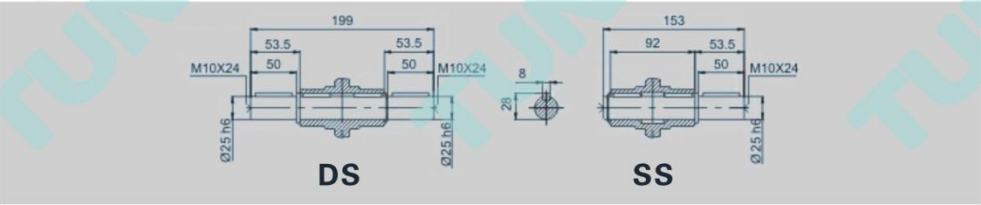

◆ 输出法兰 Output flange

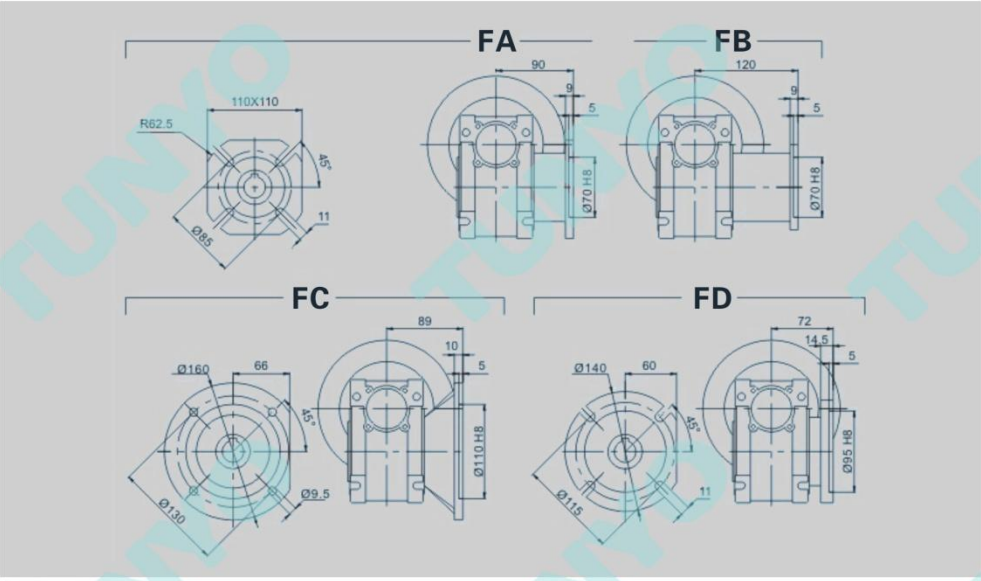

Weight : 3.6kg

NRV 063

單級蝸輪減速機
Single stage worm reducer
單軸輸入/雙軸輸入
減速比1:5~100

外形尺寸 Dimension

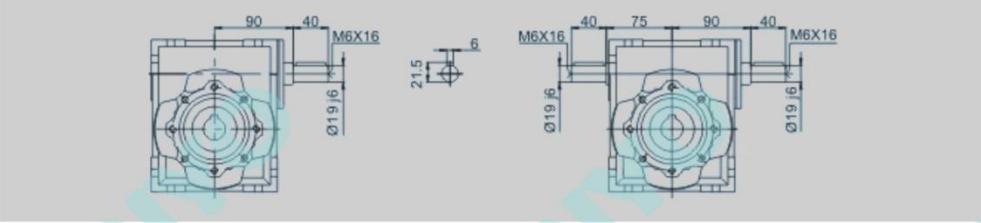

◆ 输出轴 Output shaft

◆ 输出法兰 Output flange

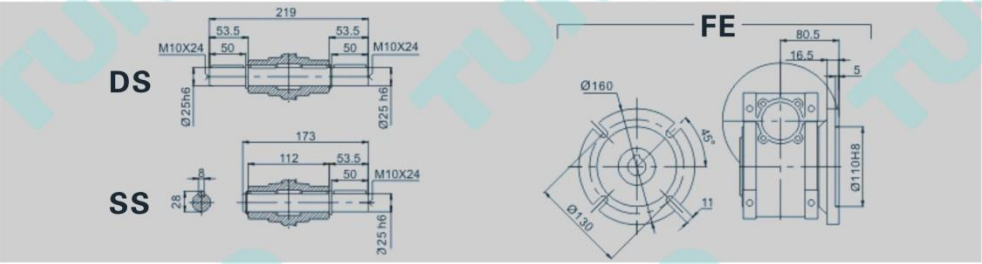

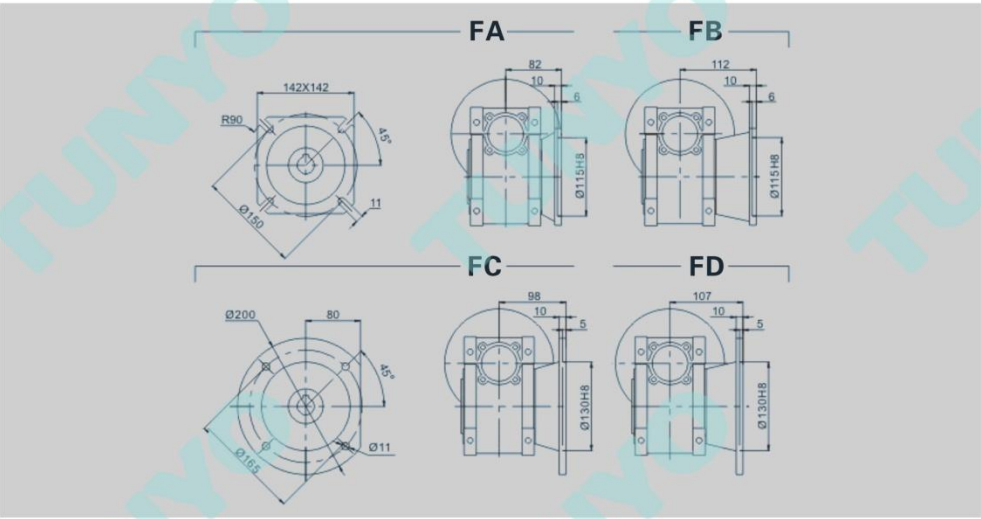

Weight : 6.3kg

NRV 075

單級蝸輪減速機
Single stage worm reducer
單軸輸入/雙軸輸入
減速比1:5~100

外形尺寸 Dimension

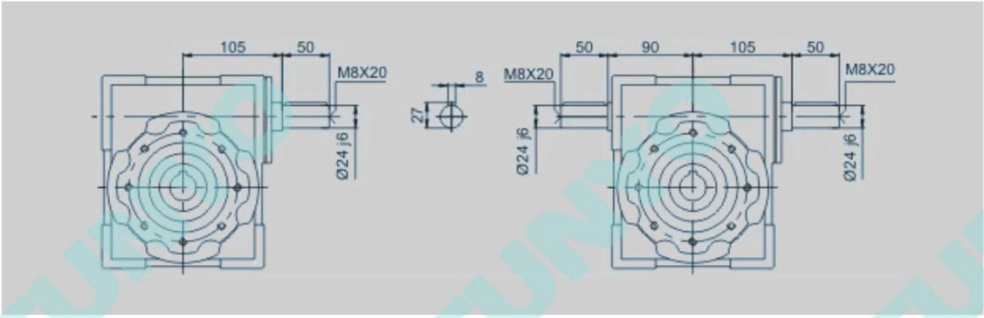

◆ 输出轴 Output shaft

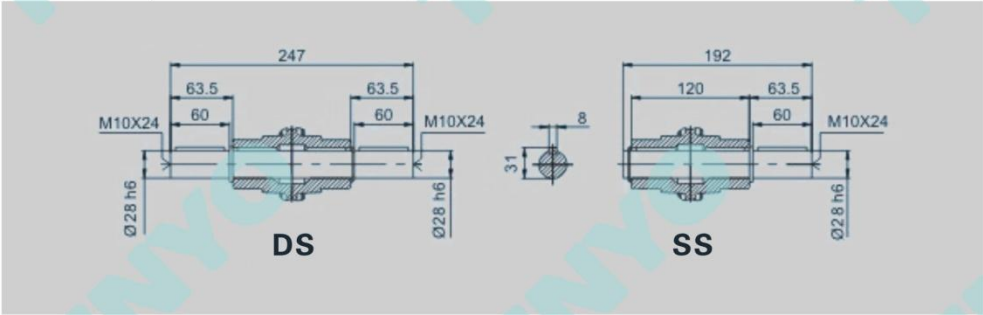

◆ 输出法兰 Output flange

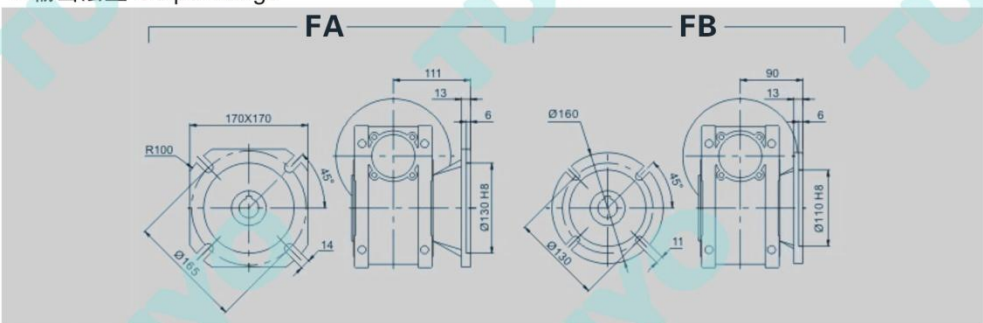

Weight : 9kg

NRV 090

單級蝸輪減速機
Single stage worm reducer

單軸輸入/雙軸輸入

減速比1:5~100

外形尺寸 Dimension

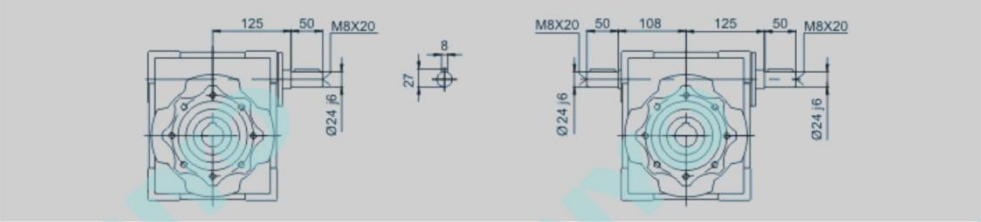

◆ 輸出軸 Output shaft

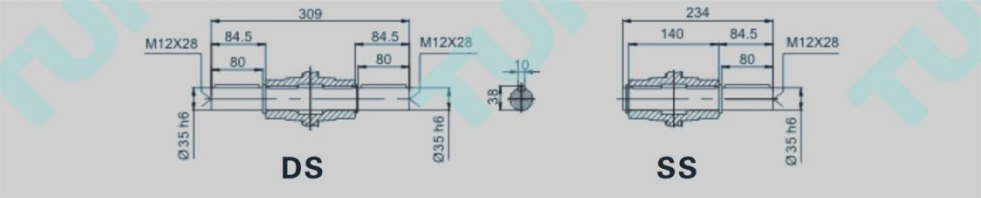

◆ 輸出法兰 Output flange

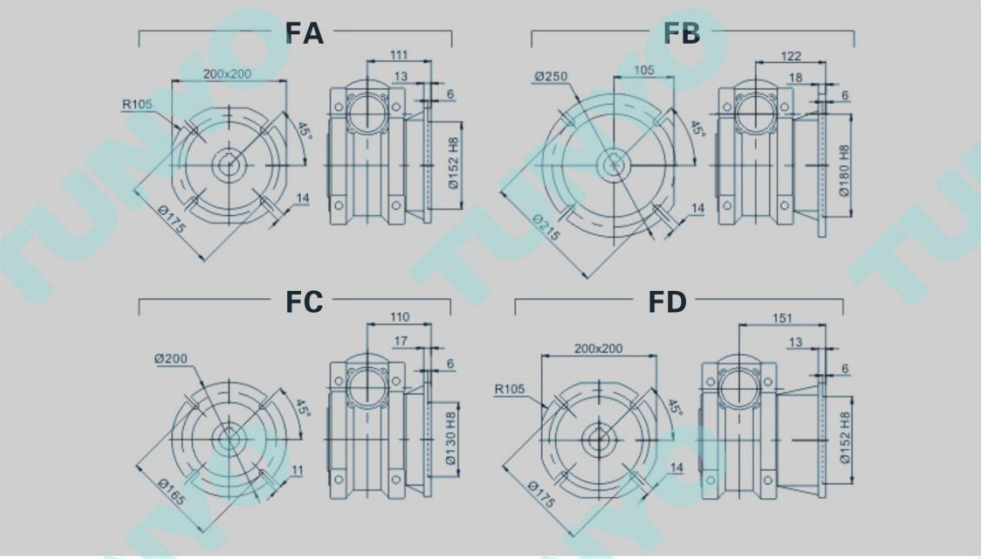

Weight : 13kg

NRV 110

單級蝸輪減速機
Single stage worm reducer
單軸輸入/雙軸輸入
減速比1:5~100

外形尺寸 Dimension

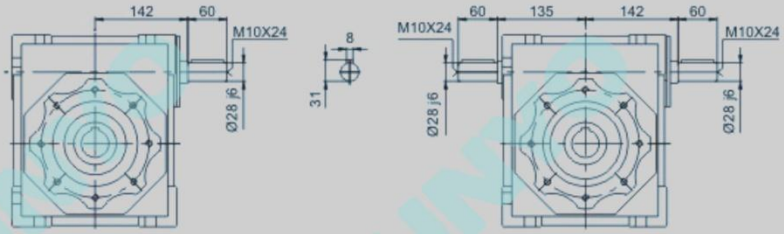

◆ 输出轴 Output shaft

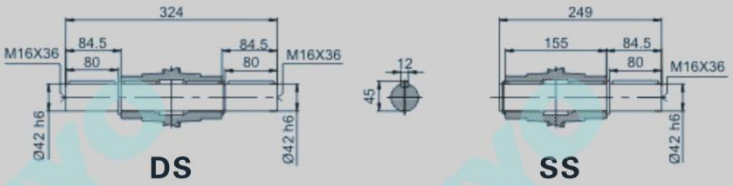

◆ 输出法兰 Output flange

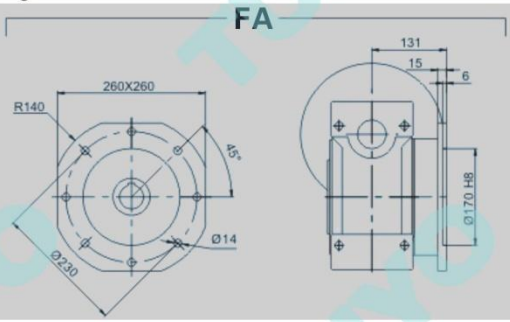

Weight : 40kg

NRV 130

單級蝸輪減速機
Single stage worm reducer
單軸輸入/雙軸輸入
減速比1:5~100

外形尺寸 Dimension

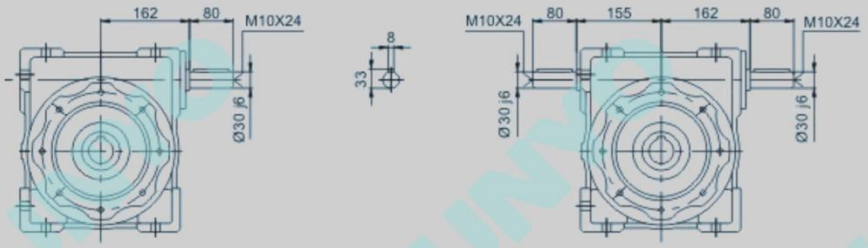

◆ 输出轴 Output shaft

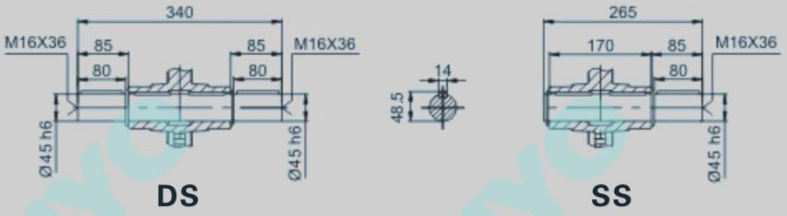

◆ 输出法兰 Output flange

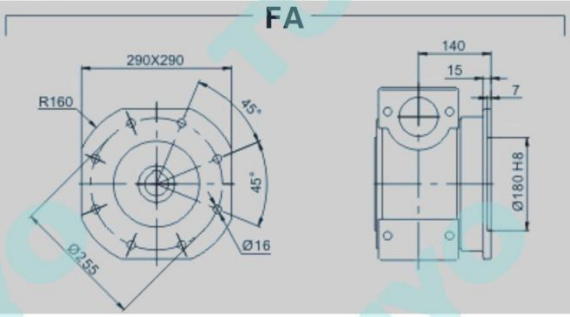

Weight : 50kg

NRV 150

單級蝸輪減速機
Single stage worm reducer
單軸輸入/雙軸輸入
減速比1:5~100

外形尺寸 Dimension

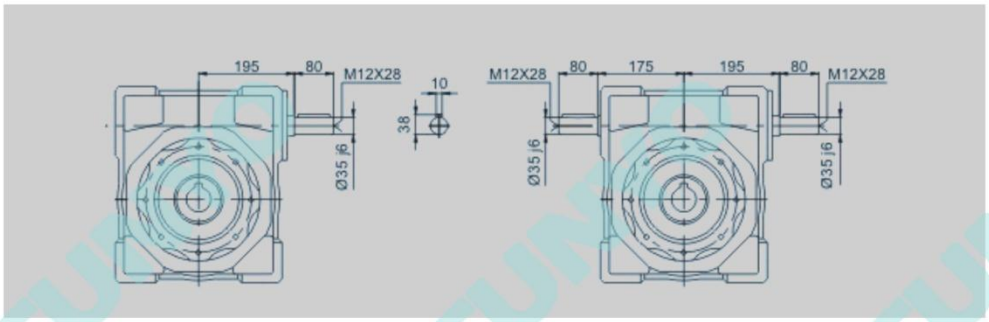

◆ 输出轴 Output shaft

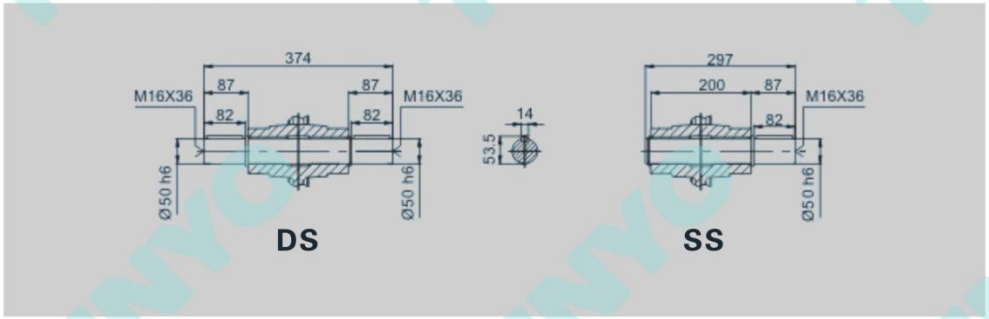

◆ 输出法兰 Output flange

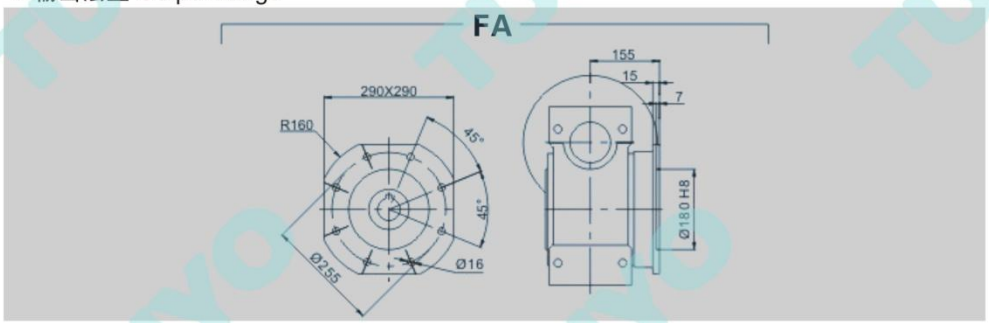

Weight : 84kg

NMRV 025

單級蝸輪減速機
Single stage worm reducer
法蘭輸入/雙輸入
減速比1:5~60

外形尺寸 Dimension

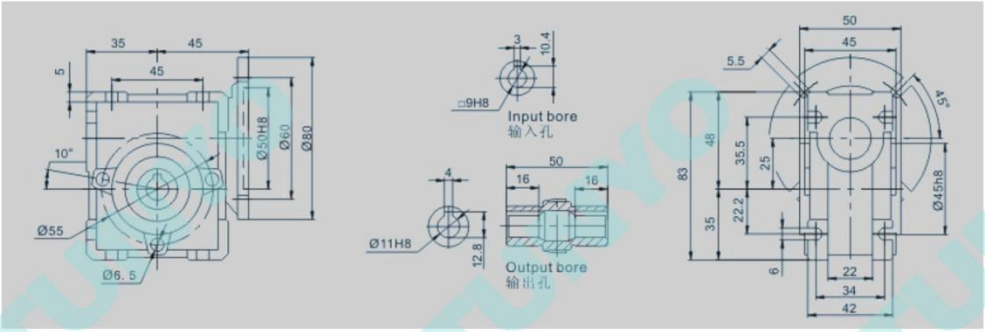

◆ 输出轴 Output shaft

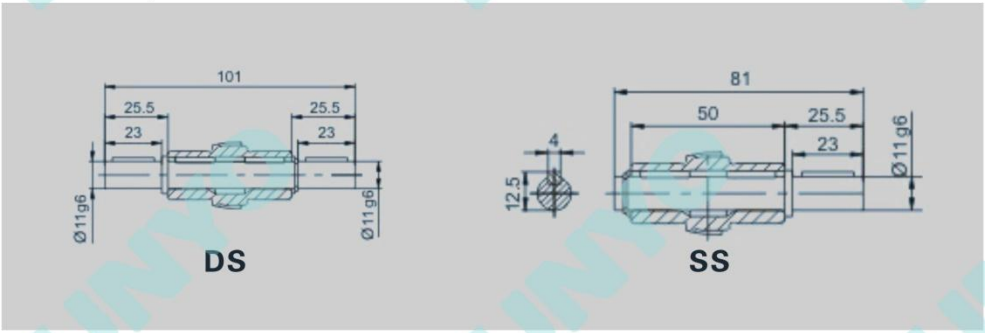

◆ 输出法兰 Output flange

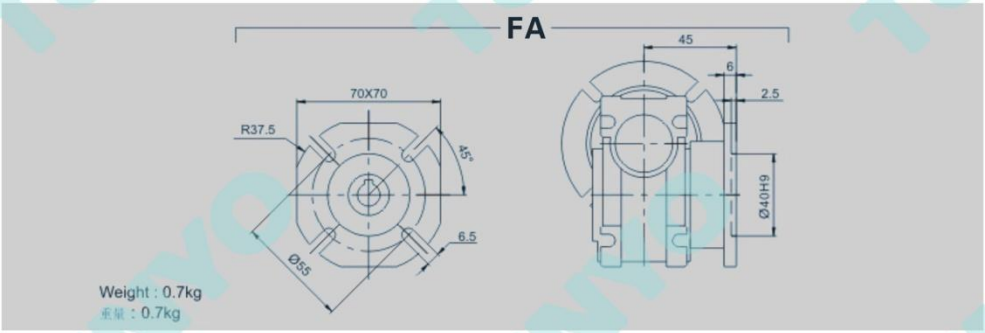

NMRV 030

單級蝸輪減速機
Single stage worm reducer
法蘭輸入/雙輸入
減速比1:5~80

外形尺寸 Dimension

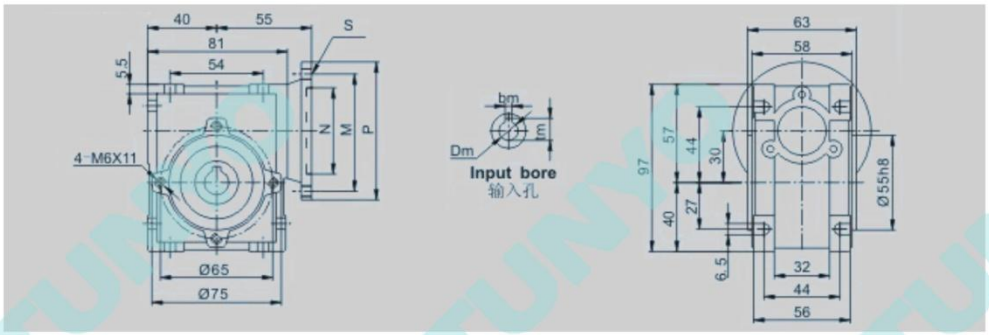

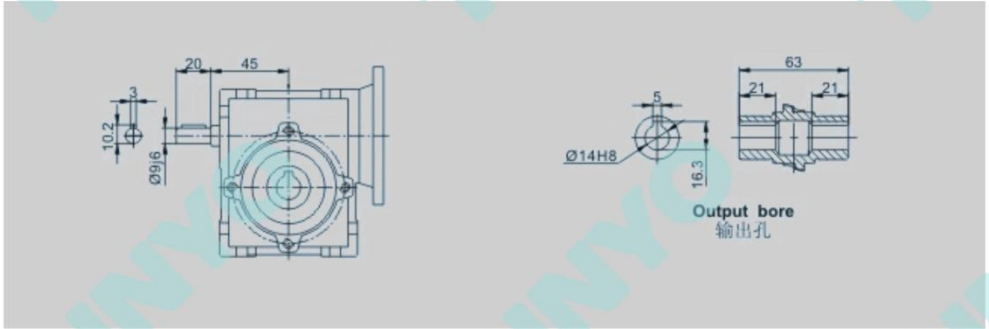

PAM-IEC 适用电机	N (H8)	M	P	bm	tm	S	Dm (H7)												
							5	7.5	10	15	20	25	30	40	50	60	80	100	Depth 深
63B5	Ø95	Ø115	Ø140	4	12.8	Ø9	11	11	11	11	11	11	11	11	11	-	-	-	23
63B14	Ø60	Ø75	Ø90	4	12.8	Ø6													
56B5	Ø80	Ø100	Ø120	3	10.4	Ø7	9	9	9	9	9	9	9	9	9	9	9	-	20
56B14	Ø50	Ø65	Ø80	3	10.4	Ø6													

Weight:1.3kg

NMRV 040

單級蝸輪減速機
Single stage worm reducer
法蘭輸入/雙輸入
減速比1:5~100

外形尺寸 Dimension

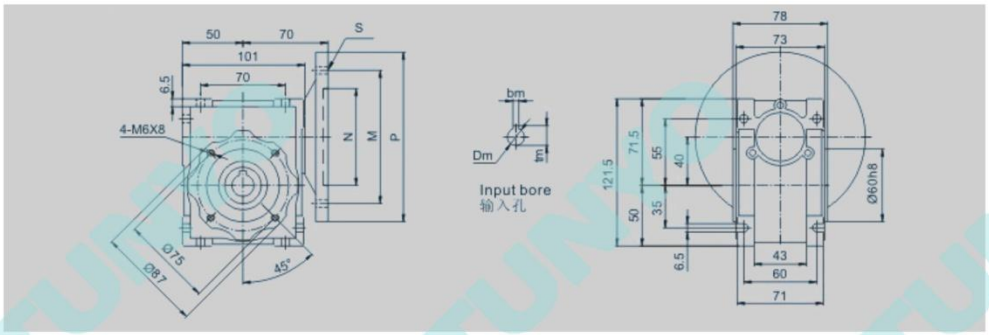

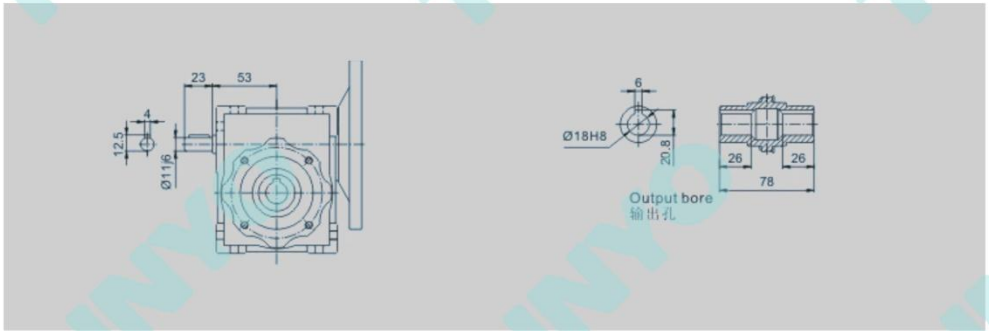

PAM-IEC 适用电机	N (H8)	M	P	bm	tm	S	Dm (H7)												
							5	7.5	10	15	20	25	30	40	50	60	80	100	Depth 深
71B5	Ø110	Ø130	Ø160	5	16.3	Ø11	14	14	14	14	14	14	14	14	–	–	–	–	30
71B14	Ø70	Ø85	Ø105	5	16.3	Ø7													
63B5	Ø95	Ø115	Ø140	4	12.8	Ø9	11	11	11	11	11	11	11	11	11	11	11	11	23
63B14	Ø60	Ø75	Ø90	4	12.8	Ø6													
56B5	Ø80	Ø100	Ø120	3	10.4	Ø7	–	–	–	–	–	–	–	–	9	9	9	9	23

Weight : 2. 4kg

NMRV 050

單級蝸輪減速機
Single stage worm reducer
法蘭輸入/雙輸入
減速比1:5~100

外形尺寸 Dimension

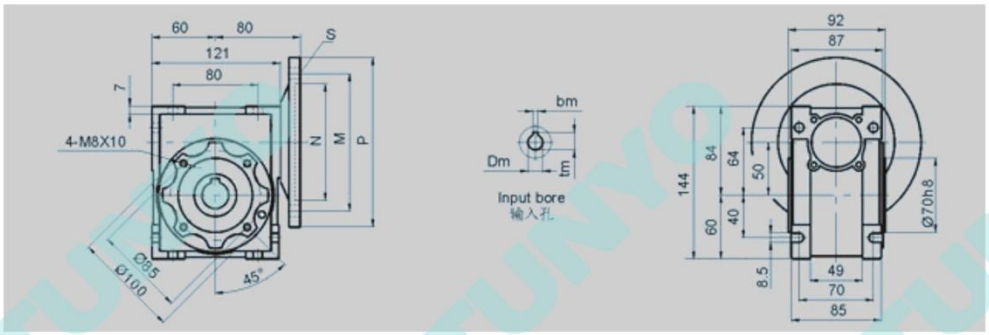

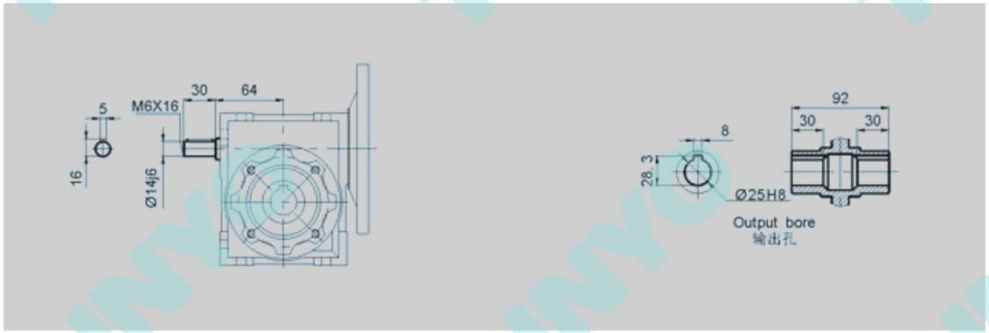

PAM-IEC 适用电机	N (H8)	M	P	bm	tm	S	Dm (H7)												
							5	7.5	10	15	20	25	30	40	50	60	80	100	Depth 深
80B5	Ø130	Ø165	Ø200	6	21.8	Ø11	19	19	19	19	19	19	19						40
80B14	Ø80	Ø100	Ø120	6	21.8	Ø7													
71B5	Ø110	Ø130	Ø160	5	16.3	Ø11	14	14	14	14	14	14	14	14	14	14	14		30
71B14	Ø70	Ø85	Ø105	5	16.3	Ø7													
63B5	Ø95	Ø115	Ø140	4	12.8	Ø9								11	11	11	11	11	23
63B14	Ø60	Ø75	Ø90	4	12.8	Ø6								11	11	11	11	11	23

Weight : 3.6kg

NMRV 063

單級蝸輪減速機
Single stage worm reducer
法蘭輸入/雙輸入
減速比1:5~100

外形尺寸 Dimension

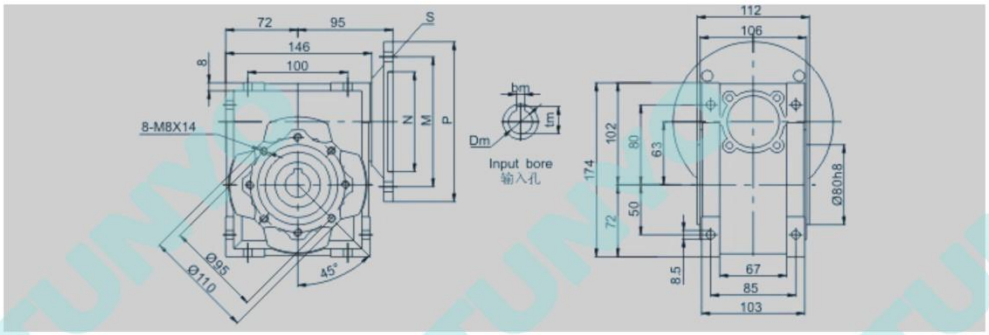

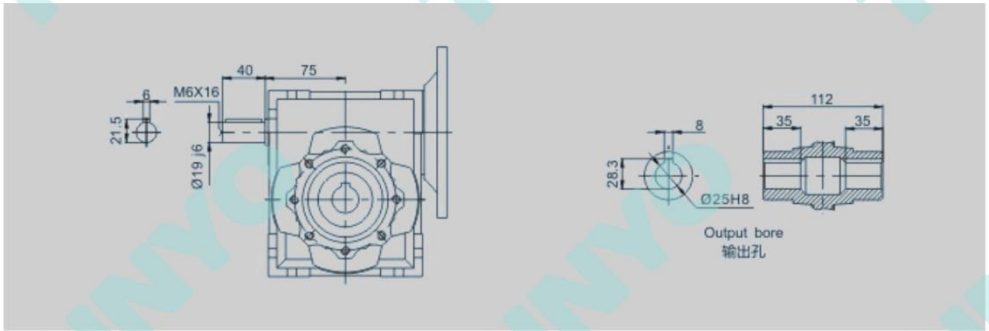

PAM-IEC 适用电机	N (H8)	M	P	bm	tm	S	Dm (H7)												
							5	7.5	10	15	20	25	30	40	50	60	80	100	Depth 深
90B5	Ø130	Ø165	Ø200	8	27.3	Ø11	24	24	24	24	24	24	24						50
90B14	Ø95	Ø115	Ø140	8	27.3	Ø9													
80B5	Ø130	Ø165	Ø200	6	21.8	Ø11	19	19	19	19	19	19	19	19	19	19			40
80B14	Ø80	Ø100	Ø120	6	21.8	Ø7													
71B5	Ø110	Ø130	Ø160	5	16.3	Ø11								14	14	14	14	14	30
71B14	Ø70	Ø85	Ø105	5	16.3	Ø7													

Weight : 6.3kg

NMRV 075

單級蝸輪減速機
Single stage worm reducer
法蘭輸入/雙輸入
減速比1:5~100

外形尺寸 Dimension

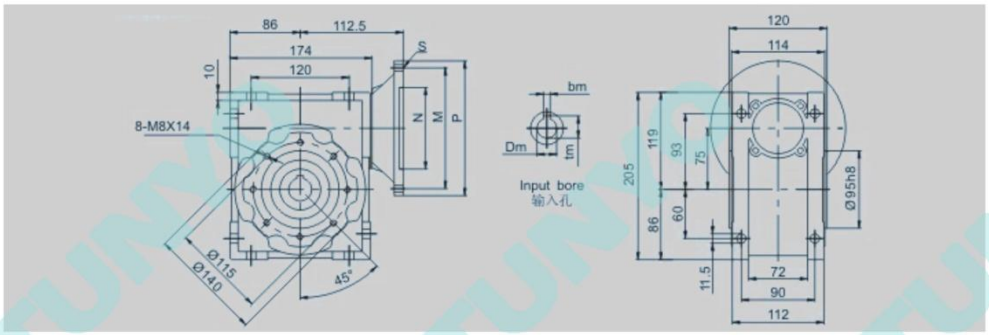

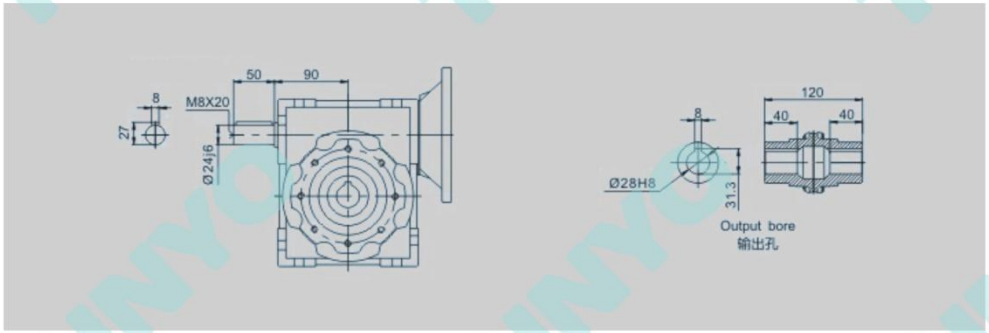

PAM-IEC 适用电机	N (H8)	M	P	bm	tm	S	Dm (H7)												
							5	7.5	10	15	20	25	30	40	50	60	80	100	Depth 深
100/112B5	Ø180	Ø215	Ø250	8	31.3	Ø15	–	28	28	28	–	–	–	–	–	–	–	–	60
100/112B14	Ø110	Ø130	Ø160	8	31.3	Ø9													
90B5	Ø130	Ø165	Ø200	8	27.3	Ø11	–	24	24	24	24	24	24	24	–	–	–	–	50
90B14	Ø95	Ø115	Ø140	8	27.3	Ø9													
80B5	Ø130	Ø165	Ø200	6	21.8	Ø11	–	–	–	–	19	19	19	19	19	19	19	19	40
80B14	Ø80	Ø100	Ø120	6	21.8	Ø7													
71B5	Ø110	Ø130	Ø160	5	16.3	Ø11	–	–	–	–	–	–	–	–	14	14	14	14	30

Weight : 9kg

NMRV 090

單級蝸輪減速機
Single stage worm reducer
法蘭輸入/雙輸入
減速比1:5~100

外形尺寸 Dimension

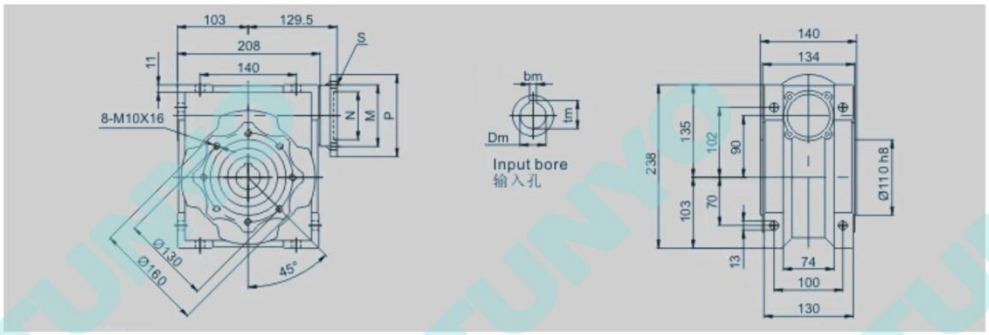

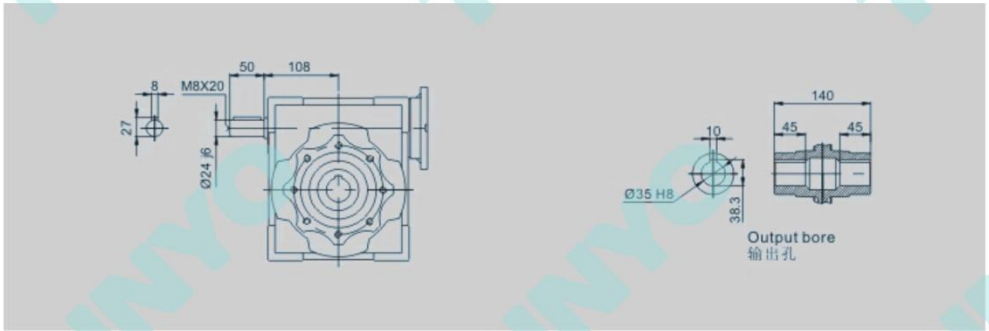

PAM-IEC 适用电机	N (H8)	M	P	bm	tm	S	Dm (H7)												
							5	7.5	10	15	20	25	30	40	50	60	80	100	Depth 深
100/112B5	Ø180	Ø215	Ø250	8	31.3	Ø15	-	28	28	28	28	28	28	-	-	-	-	-	60
100/112B14	Ø110	Ø130	Ø160	8	31.3	Ø9													
90B5	Ø130	Ø165	Ø200	8	27.3	Ø11	-	24	24	24	24	24	24	24	24	24	-	-	50
90B14	Ø95	Ø115	Ø140	8	27.3	Ø9													
80B5	Ø130	Ø165	Ø200	6	21.8	Ø11	-	-	-	-	-	-	-	19	19	19	19	19	40
80B14	Ø80	Ø100	Ø120	6	21.8	Ø7													

Weight : 13kg

NMRV 110

單級蝸輪減速機
Single stage worm reducer
法蘭輸入/雙輸入
減速比1:5~100

外形尺寸 Dimension

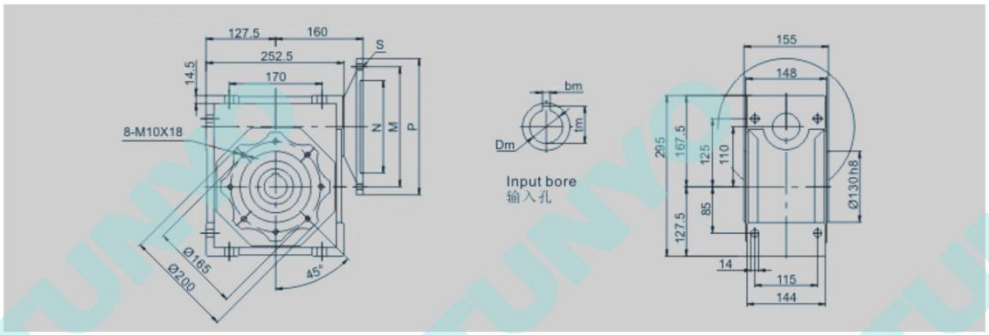

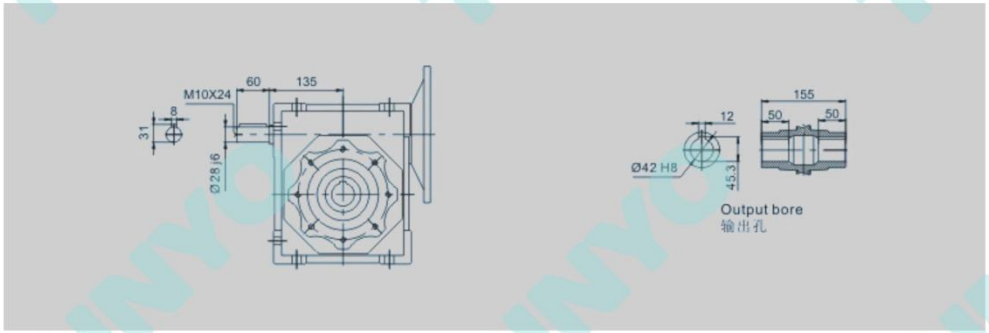

PAM-IEC 适用电机	N (H8)	M	P	bm	tm	S	Dm (H7)												
							5	7.5	10	15	20	25	30	40	50	60	80	100	Depth 深
132B5	Ø230	Ø265	Ø300	10	41.3	Ø15	–	38*	38*	38*	38*	–	–	–	–	–	–	–	80
100/112B5	Ø180	Ø215	Ø250	8	31.3	Ø15	–	28	28	28	28	28	28	28	28	28	–	–	60
90B5	Ø130	Ø165	Ø200	8	27.3	Ø11	–	–	–	–	–	24	24	24	24	24	24	24	50
80B5	Ø130	Ø165	Ø200	6	21.8	Ø11	–	–	–	–	–	–	–	–	–	–	19	19	40

Weight : 40kg

NMRV 130

單級蝸輪減速機
Single stage worm reducer
法蘭輸入/雙輸入
減速比1:5~100

外形尺寸 Dimension

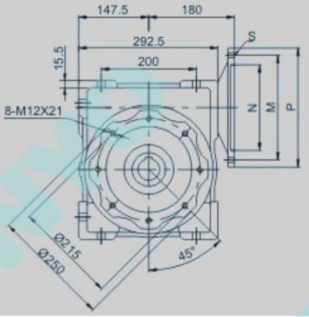

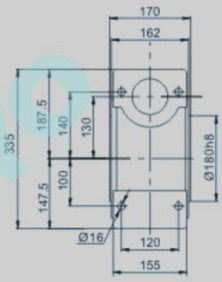

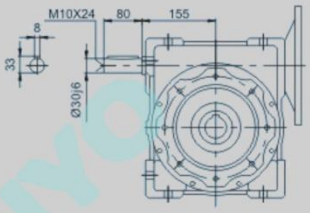

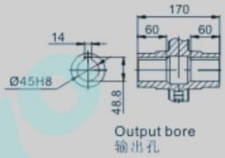

PAM-IEC 适用电机	N (H8)	M	P	bm	tm	S	Dm (H7)												
							5	7.5	10	15	20	25	30	40	50	60	80	100	Depth 深
132B5	Ø230	Ø265	Ø300	10	41.3	Ø15	–	38*	38*	38*	38*	38*	38*	38*	–	–	–	–	80
100/112B5	Ø180	Ø215	Ø250	8	31.3	Ø15	–	–	–	–	–	28	28	28	28	28	28	28	60
90B5	Ø130	Ø165	Ø200	8	27.3	Ø11	–	–	–	–	–	–	–	–	–	–	24	24	50

Weight : 50kg

NMRV 150

單級蝸輪減速機
Single stage worm reducer
法蘭輸入/雙輸入
減速比1:5~100

外形尺寸 Dimension

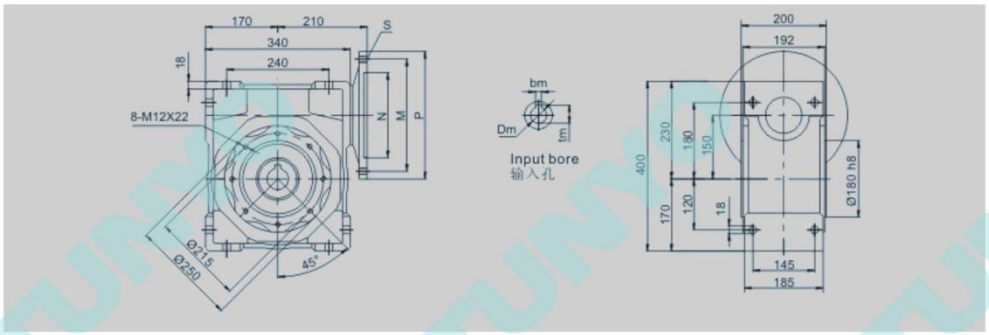

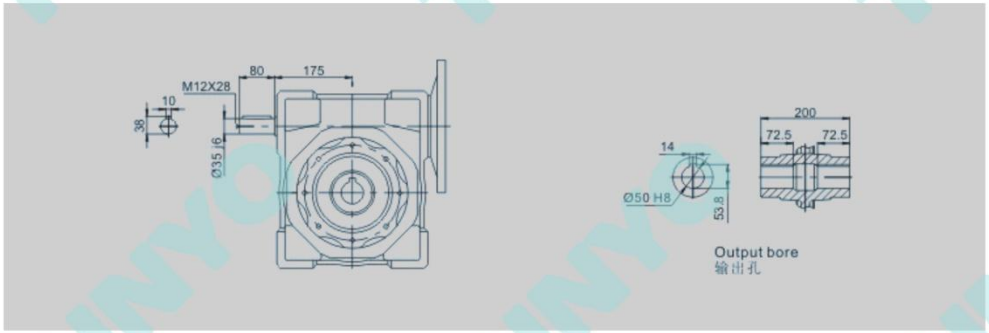

PAM-IEC 适用电机	N (H8)	M	P	bm	tm	S	Dm (H7)												
							5	7.5	10	15	20	25	30	40	50	60	80	100	Depth 深
160B5	Ø250	Ø300	Ø350	12	45.3	Ø15	–	42	42	42	42	42	–	–	–	–	–	–	110
132B5	Ø230	Ø265	Ø300	10	41.3	Ø15	–	–	–	–	38	38	38	38	38	38	–	–	80
100/112B5	Ø180	Ø215	Ø250	8	31.3	Ø15	–	–	–	–	–	–	–	–	28	28	28	28	60

Weight : 84kg

DRV

雙級蝸輪減速機

Single stage worm reducer

單輸入/雙輸入

減速比1:100~5000

外形尺寸 Dimension

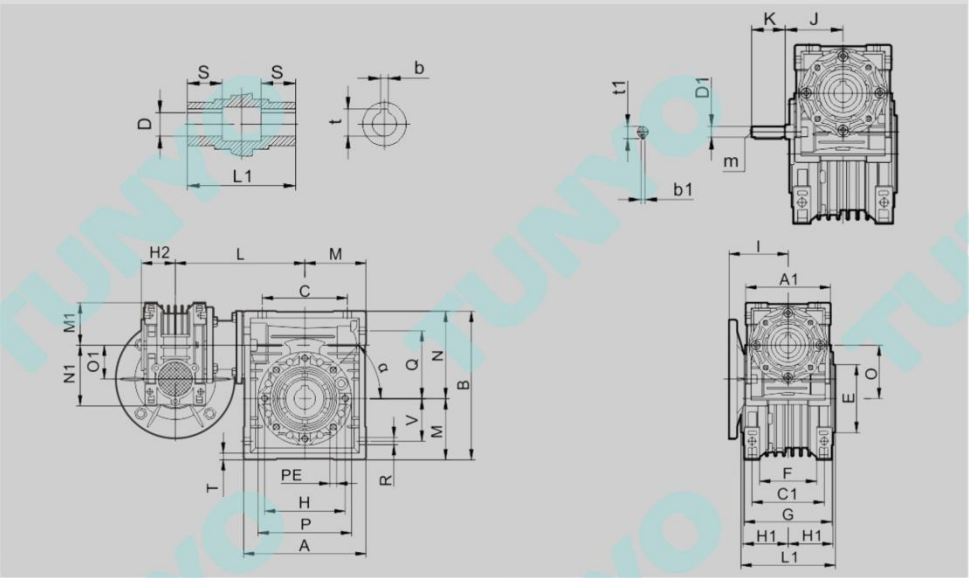

DRV	A	A1	B	C	C1	D(H7)	D1(j6)	E(h8)	F	G	H	H1	H2	I	J	K	L	L1	M	M1
025/030	80	70	97	54	44	14	-	55	32	56	65	29	22.5	45	-	-	100	63	40	35
025/040	100	70	121.5	70	60	18(19)	-	60	43	71	75	36.5	22.5	45	-	-	115	78	50	35
030/040	100	80	121.5	70	60	18(19)	9	60	43	71	75	36.5	29	55	51	20	120	78	50	40
030/050	120	80	144	80	70	25(24)	9	70	49	85	85	43.5	29	55	51	20	130	92	60	40
030/063	144	80	174	100	85	25(28)	9	80	67	103	95	53	29	55	51	20	145	112	72	40
040/075	172	100	205	120	90	28(35)	11	95	72	112	115	57	36.5	70	60	23	165	120	86	50
040/090	206	100	238	140	100	35(38)	11	110	74	130	130	67	36.5	70	60	23	182	140	103	50
050/110	255	120	295	170	115	42	14	130	-	144	165	74	43.5	80	74	30	225	155	127.5	60
063/130	293	144	335	200	120	45	19	180	-	155	215	81	53	95	90	40	245	170	146.5	72
063/150	340	144	400	240	145	50	19	180	-	185	215	96	53	95	90	40	275	200	170	72

DRV	N	N1	O	O1	P	Q	R	S	V	PE	α	b	b1	t	t1	m	Kg
025/030	57	48	30	25	75	44	6.5	21	27	M6×10(n=4)	0°	5	-	16.3	-	-	32.5
025/040	71.5	48	40	25	87	55	6.5	26	35	M6×10(n=4)	45°	6	-	20.8(21.8)	-	-	43
030/040	71.5	57	40	30	87	55	6.5	26	35	M6×10(n=4)	45°	6(6)	3	20.8(21.8)	10.2	-	43
030/050	84	57	50	30	100	64	8.5	30	40	M8×10(n=4)	45°	8(8)	3	28.3(27.3)	10.2	-	53.5
030/063	102	57	63	30	110	80	8.5	36	50	M8×14(n=8)	45°	8(8)	3	28.3(31.3)	10.2	-	53.5
040/075	119	71.5	75	40	140	93	11	40	60	M8×14(n=8)	45°	8(10)	4	31.3(38.3)	12.5	-	63.5
040/090	135	71.5	90	40	160	102	13	45	70	M10×18(n=8)	45°	10	4	38.3(41.3)	12.5	-	84.5
050/110	167.5	84	110	50	200	125	14	50	85	M10×18(n=8)	45°	12	5	45.3	16	-	84.5
063/130	187.5	102	130	63	250	140	16	60	100	M12×21(n=8)	45°	14	6	48.8	21.5	M6	85
063/150	230	102	150	63	250	180	18	72.5	120	M12×21(n=8)	45°	14	6	53.8	21.5	M6	87

NMRV连接尺寸图表 Connecting dimension sheet

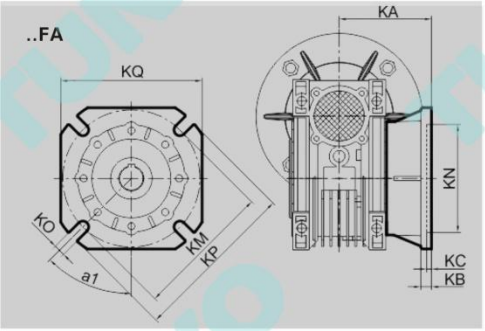

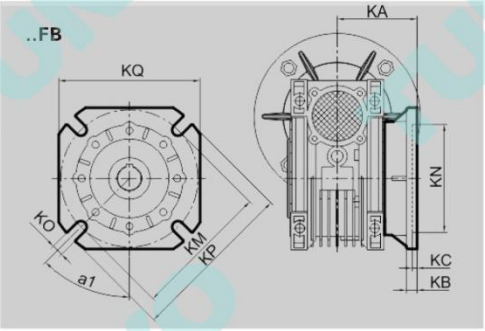

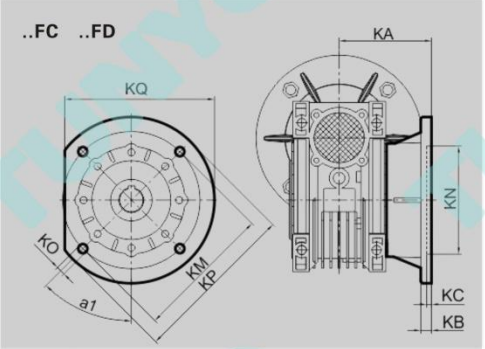

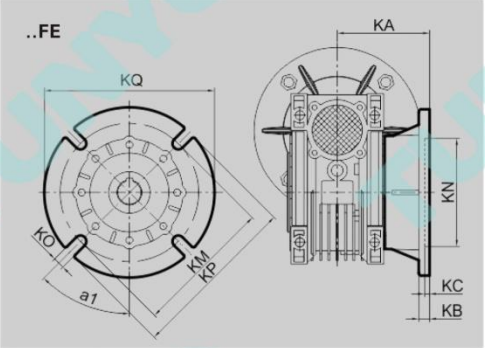

NMRV	FA								
	a1	KA	KB	KC	KM	KN_{H8}	KO	KP	KQ
030	45°	54.5	6	4	68	50	6.5(n=4)	80	70
040	45°	67	7	4	75	60	9 (n=4)	110	95
050	45°	90	9	5	85	70	11(n=4)	125	110
063	45°	82	10	6	150	115	11(n=4)	180	142
075	45°	111	13	6	165	130	14(n=4)	200	170
090	45°	111	13	6	175	152	14(n=4)	210	200
110	45°	139	15	6	230	170	14(n=8)	280	260
130	45°	140	15	6	255	180	16(n=8)	320	290
150	22.5°	155	15	6	255	180	16(n=8)	320	290

NMRV	FB								
	a1	KA	KB	KC	KM	KN_{H8}	KO	KP	KQ
030	-	-	-	-	-	-	-	-	-
040	45°	97	7	4	75	60	9 (n=4)	110	95
050	45°	120	9	5	85	70	11(n=4)	125	110
063	45°	112	10	6	150	115	11(n=4)	180	142
075	45°	90	13	6	130	110	11(n=4)	160	-
090	45°	122	18	6	215	180	14(n=4)	250	-
110	-	-	-	-	-	-	-	-	-
130	-	-	-	-	-	-	-	-	-
150	-	-	-	-	-	-	-	-	-

NMRV	FC								
	a1	KA	KB	KC	KM	KN_{H8}	KO	KP	KQ
040	45°	80	9	5	115	95	9.5(n=4)	140	-
050	45°	89	10	5	130	110	9.5(n=4)	160	-
063	45°	98	10	5	165	130	11(n=4)	200	-
090	45°	110	17	6	165	130	11(n=4)	200	-

NMRV	FD								
	a1	KA	KB	KC	KM	KN_{H8}	KO	KP	KQ
040	45°	58	12	5	100	80	9(n=4)	120	-
050	45°	72	14.5	5	115	95	11(n=4)	140	-
063	45°	107	10	5	165	130	11(n=4)	200	-
090	45°	151	13	6	175	152	14(n=4)	210	-

NMRV	FE								
	a1	KA	KB	KC	KM	KN_{H8}	KO	KP	KQ
040	-	-	-	-	-	-	-	-	-
050	-	-	-	-	-	-	-	-	-
063	45°	80.5	16.5	5	130	110	11(n=4)	160	-
090	-	-	-	-	-	-	-	-	-

NMRV連接尺寸圖表 Connecting dimension sheet

◆ NMRV..IEC输入法兰尺寸 Input flange dimension

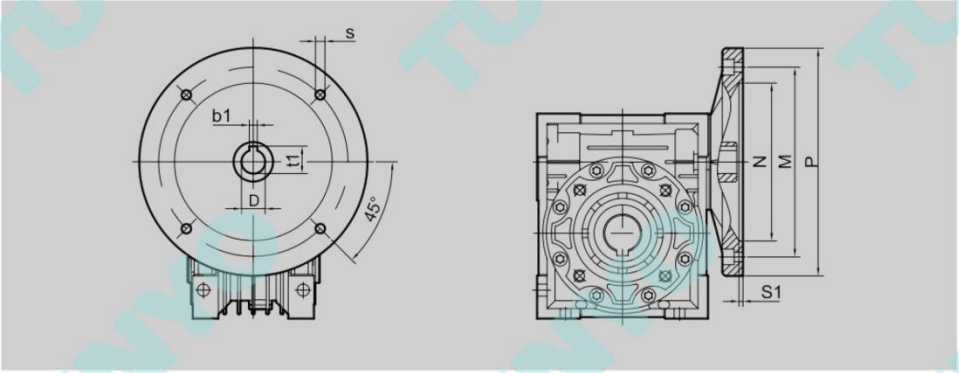

NMRV	PAM-IEC	N		M		P		S		b1	t1	s1	i(速比/ratio)											
													5	7.5	10	15	20	25	30	40	50	60	80	100
		B5	B14	B5	B14	B5	B14	B5	B14				D											
025	56B14	—	50	—	65	—	80	—	6	3	10.4	4	9	9	9	9	9	9	9	9	9	9	—	—
030	56B5/B14	80	50	100	65	120	80	6.5	5.5	3	10.4	4	9	9	9	9	9	9	9	9	9	9	9	—
	63B5/B14	95	60	115	75	140	90	9	5.5	4	12.8	4	11	11	11	11	11	11	11	11	11	—	—	—
040	56B5/B14	80	50	100	65	120	80	6.5	5.5	3	10.4	4	—	—	—	—	—	—	—	—	9	9	9	9
	63B5/B14	95	60	115	75	140	90	9	5.5	4	12.8	4	11	11	11	11	11	11	11	11	11	11	11	11
	71B5/B14	110	70	130	85	160	105	9	7	5	16.3	5	14	14	14	14	14	14	14	14	—	—	—	—
050	63B5/B14	95	60	115	75	140	90	9	5.5	4	12.8	5	—	—	—	—	—	—	—	11	11	11	11	11
	71B5/B14	110	70	130	85	160	105	9	7	5	16.3	5	14	14	14	14	14	14	14	14	14	14	14	
	80B5/B14	130	80	165	100	200	120	11	7	6	21.8	5	19	19	19	19	19	19	19	19	—	—	—	—
063	71B5/B14	110	70	130	85	160	105	9	7	5	16.3	5	—	—	—	—	—	—	—	14	14	14	14	14
	80B5/B14	130	80	165	100	200	120	11	7	6	21.8	5	—	19	19	19	19	19	19	19	19	19	19	19
	90B5/B14	130	95	165	115	200	140	11	9	8	27.3	5	—	24	24	24	24	24	24	—	—	—	—	—
075	71B5	110	—	130	—	160	—	9	7	5	16.3	5	—	—	—	—	—	—	—	—	14	14	14	14
	80B5/B14	130	80	165	100	200	120	11	7	6	21.8	5	—	—	—	—	—	—	19	19	19	19	19	19
	90B5/B14	130	95	165	115	200	140	11	9	8	27.3	5	—	24	24	24	24	24	24	24	—	—	—	—
	100B5/B14	180	110	215	130	250	160	13	9	8	31.3	5.5	—	28	28	28	—	—	—	—	—	—	—	—
	112B5/B14	180	110	215	130	250	160	13	9	8	31.3	5.5	—	28	—	—	—	—	—	—	—	—	—	—
090	80B5/B14	130	80	165	100	200	120	11	7	6	21.8	5	—	—	—	—	—	—	—		19	19	19	19
	90B5/B14	130	95	165	115	200	140	11	9	8	27.3	5	—	—	—	—	—	24	24	24	24	24	—	—
	100B5/B14	180	110	215	130	250	160	13	9	8	31.3	5.5	—	28	28	28	28	28	28	—	—	—	—	—
	112B5/B14	180	110	215	130	250	160	13	9	8	31.3	5.5	—	28	28	28	28	—	—	—	—	—	—	—
110	80B5	130	—	165	—	200	—	11	7	6	21.8	6	—	—	—	—	—	—	—	—	—	—	19	19
	90B5	130	—	165	—	200	—	11	9	8	27.3	6	—	—	—	—	—	—	24	24	24	24	24	24
	100B5	180	—	215	—	250	—	13	9	8	27.3	6	—	28	28	28	28	28	28	28	28	28	—	—
	112B5	180	—	215	—	250	—	13	9	8	31.3	6	—	28	28	28	28	28	28	—	—	—	—	—
	132B5	230	—	265	—	300	—	13	—	10	41.3	6	—	38	38	38	38	—	—	—	—	—	—	—
130	90B5	130	—	165	—	200	—	11	9	8	27.3	6	—	—	—	—	—	—	—	—	—	—	24	24
	100B5	180	—	215	—	250	—	13	9	8	31.3	6	—	—	—	—	—	—	—	28	28	28	28	28
	112B5	180	—	215	—	250	—	13	9	8	31.3	6	—	28	28	28	28	28	28	28	28	28	—	—
	132B5	230	—	265	—	300	—	13	—	10	41.3	6	—	38	38	38	38	38	38	38	—	—	—	—
150	100/112B5	180	—	215	—	250	—	13	9	8	31.3	6	—	—	—	—	—	—	—	—	28	28	28	28
	132B5	230	—	265	—	300	—	13	—	10	41.3	6	—	—	—	—	38	38	38	38	38	38	—	—
	160B5	250	—	300	—	350	—	19	—	12	45.3	6	—	42	42	42	42	42	—	—	—	—	—	—

NMRV連接尺寸圖表 Connecting dimension sheet

◆ NMRV..NEMA输入法兰尺寸 Input flange dimension

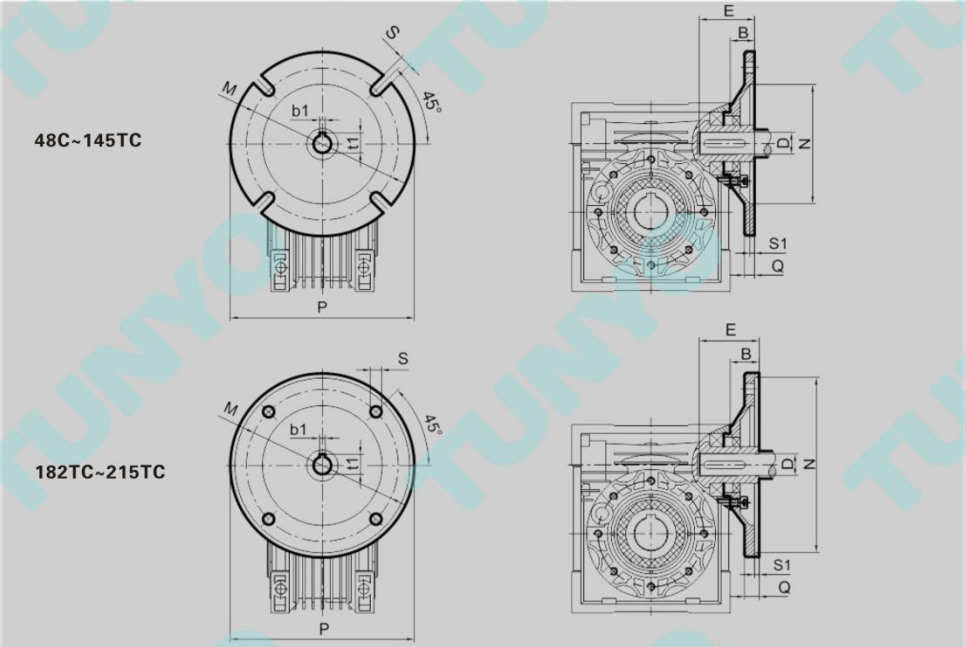

NMRV	NEMA Flange	B	D	E	b1	t1	M	N	P	Q	S	S1
030	48C	1.03	0.500	1.66	0.130	0.560	3.750	3.0	5.7	0.433	0.320	0.177
040	56C	1.15	0.625	2.06	0.188	0.713	5.875	4.5	6.5	0.433	0.413	0.177
050	56C	1.15	0.625	2.06	0.188	0.713	5.875	4.5	6.5	0.433	0.413	0.177
063	56C	1.22	0.625	2.06	0.188	0.713	5.875	4.5	6.5	0.433	0.413	0.177
	143TC	1.22	0.875	2.12	0.188	0.963	5.875	4.5	6.5	0.433	0.413	0.177
	145TC											
075 090	56C	1.50	0.625	2.06	0.188	0.713	5.875	4.5	6.5	0.433	0.413	0.177
	143TC	1.50	0.875	2.12	0.188	0.963	5.875	4.5	6.5	0.433	0.413	0.177
	145TC											
	182TC	1.50	1.125	2.62	0.250	1.240	7.250	8.5	9.0	0.472	0.551	0.197
	184TC											
110 130	56C	1.89	0.625	2.06	0.188	0.713	5.875	4.5	6.5	0.433	0.413	0.177
	143TC	1.89	0.875	2.12	0.188	0.963	5.875	4.5	6.5	0.433	0.413	0.177
	145TC											
	182TC	1.89	1.125	2.62	0.250	1.240	7.250	8.5	9.0	0.472	0.551	0.197
	184TC											
	213TC	1.89	1.375	3.12	0.312	1.517	7.250	8.5	9.0	0.472	0.551	0.197
	215TC											
150	182TC	1.33	1.125	2.62	0.250	1.240	7.250	8.5	9.0	0.472	0.551	0.197
	184TC											
	213TC	1.33	1.375	3.12	0.312	1.517	7.250	8.5	9.0	0.472	0.551	0.197
	215TC											

NMRV連接尺寸圖表 Connecting dimension sheet

◆ NMRV..ST伺服电机输入法兰尺寸 Servo motor input flange dimension

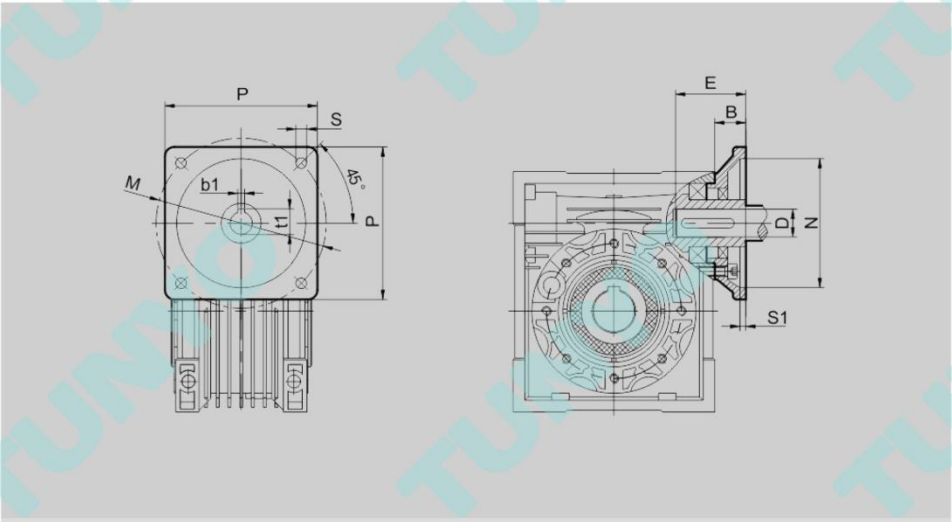

NMRV	P	B	D_{h7}	E	b1	t1	M	N	S	S1
040	60	35	14	30	5	16.3	70	50	5.5	4
050	60	35	14	30	5	16.3	70	50	5.5	4
	80	28	19	35	6	21.8	90	70	6	5
	90	30	16	35	5	18.3	100	80	6.5	5
	110	26	19	55	6	21.8	130	95	9	6
	130	32	22	57	6	24.8	145	110	9	6
063	60	40	14	30	5	16.3	70	50	5.5	4
	80	21	19	35	6	21.8	90	70	6	5
	90	21	16	35	5	18.3	100	80	6.5	5
	110	46	19	55	6	21.8	130	95	9	6
	130	40	22	57	6	24.8	145	110	9	6
075	110	47	19	55	6	21.8	130	95	9	6
	130	40	22	57	6	24.8	145	110	9	6
	150	38	28	58	8	31.3	165	130	11	6
090	110	47	19	55	6	21.8	130	95	9	6
	130	40	22	57	6	24.8	145	110	9	6
	150	38	28	58	8	31.3	165	130	11	6
110	130	38	22	57	6	24.8	145	110	9	6
	150	38	28	58	8	31.3	165	130	11	6
	180	38	35	65	10	38.3	200	114.3	13.5	6
130	130	38	22	57	6	24.8	145	110	9	6
	150	38	28	58	8	31.3	165	130	11	6
	180	38	35	65	10	38.3	200	114.3	13.5	6
150	130	38	22	57	6	24.8	145	110	9	6
	150	38	28	58	8	31.3	165	130	11	6
	180	38	35	65	10	38.3	200	114.3	13.5	6

附件尺寸圖表 Accessories outline dimension sheet

◆ 输出轴 Output shafts

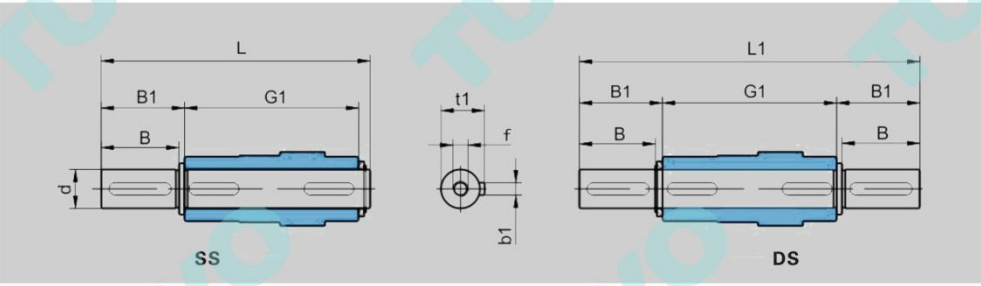

NMRV	dh6	B	B1	G1	L	L1	f	b1	t1
025	11	23	25.5	50	81	101	-	4	12.5
030	14	30	32.5	63	102	128	M6*17	5	16
040	18	40	43	78	128	164	M6*17	6	20.5
050	25	50	53.5	92	153	199	M10*27	8	28
063	25	50	53.5	112	173	219	M10*27	8	28
075	28	60	63.5	120	192	247	M10*27	8	31
090	35	80	84.5	140	234	309	M12*34	10	38
110	42	80	84.5	155	249	324	M16*42	12	45
130	45	80	85	170	265	340	M16*42	14	48.5
150	50	82	87	200	297	374	M16*42	14	53.5

◆ 蜗杆尾出轴(E) Extension worm shaft(E)

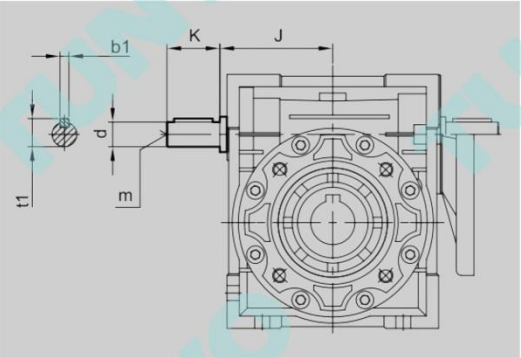

NMRV	J	d(j6)	K	m	b1	t1
025	37	9	20	-	3	10.2
030	45	9	20	-	3	10.2
040	53	11	23	-	4	12.5
050	64	14	30	M6	5	16
063	75	19	40	M6	6	21.5
075	90	24	50	M8	8	27
090	108	24	50	M8	8	27
110	135	28	60	M10	8	31
130	155	30	80	M10	8	33
150	175	35	80	M12	10	38

附件尺寸圖表 Accessories outline dimension sheet

◆ 扭力臂 Torque arm

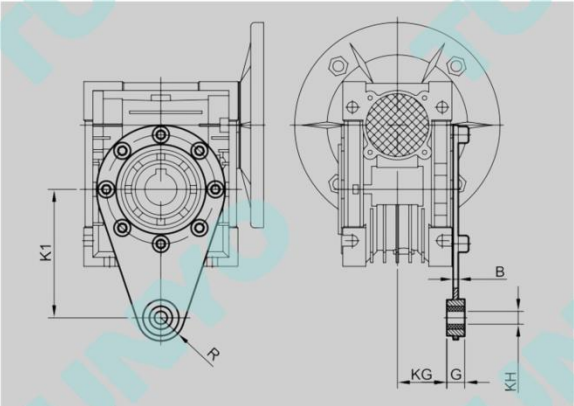

NMRV	K1	G	KG	KH	R	B
025	70	14	17.5	8	15	4
030	85	14	24	8	15	4
040	100	14	31.5	10	18	4
050	100	14	38.5	10	18	4
063	150	14	49	10	18	6
075	200	25	47.5	20	30	6
090	200	25	57.5	20	30	6
110	250	30	62	25	35	6
130	250	30	69	25	35	6
150	250	30	84	25	35	8

◆ 防尘盖 Cover

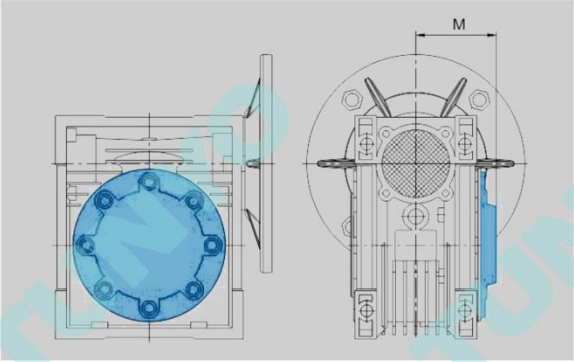

NMRV	M
030	42
040	50
050	58
063	69
075	74
090	85
110	94
130	102
150	117

安裝方位圖 Installation positions diagram

◆ 输出法兰位置 Position diagram for output flange

FA1,FB1,FC1,FD1,FE1	FA2,FB2,FC2,FD2,FE2
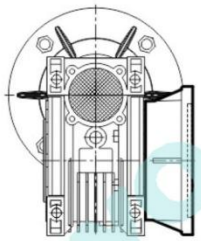	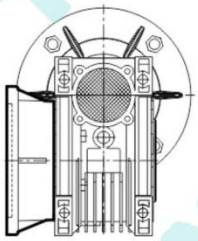

如果没有特殊要求，一般按出厂标准位置如图F..1方式和B3位置提供。

Unless specified otherwise, the gear units is supplied with the flange in pos. **F..1** referred to position **B3**.

◆ 单向输出轴位置 Position diagram for single output shaft

SS1	SS2
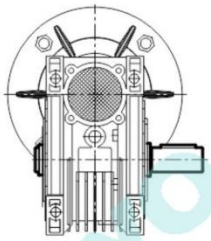	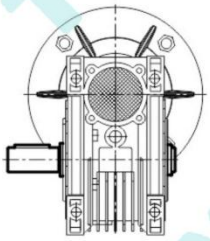

如果没有特殊要求，一般按出厂标准位置如图SS1方式和B3位置提供。

Unless specified otherwise, the gear units is supplied with the flange in pos. **SS1** referred to position **B3**.

◆ 扭力臂(A)位置 Torque arm(A)position

A1	A2
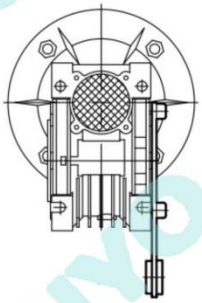	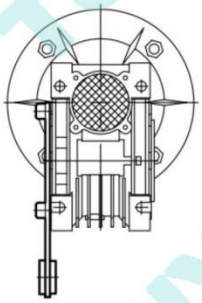

如果没有特殊要求，一般按出厂标准位置如图A1方式和B3位置提供。

Unless specified otherwise, the gear units is supplied with the flange in pos. **A1** referred to position **B3**.

安裝方位圖 Installation positions diagram

◆ 符号释意 Symbols used

符号/Symbol	含义/Meaning
	排气阀 Breather valve
	油位塞 Oil level plug
	放油塞 Oil drain plug

◆ 电机接线盒方位 Position of motor terminal box

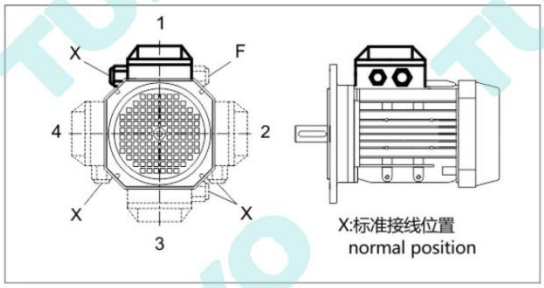

◆ NMRV..安装方位 Mounting positions

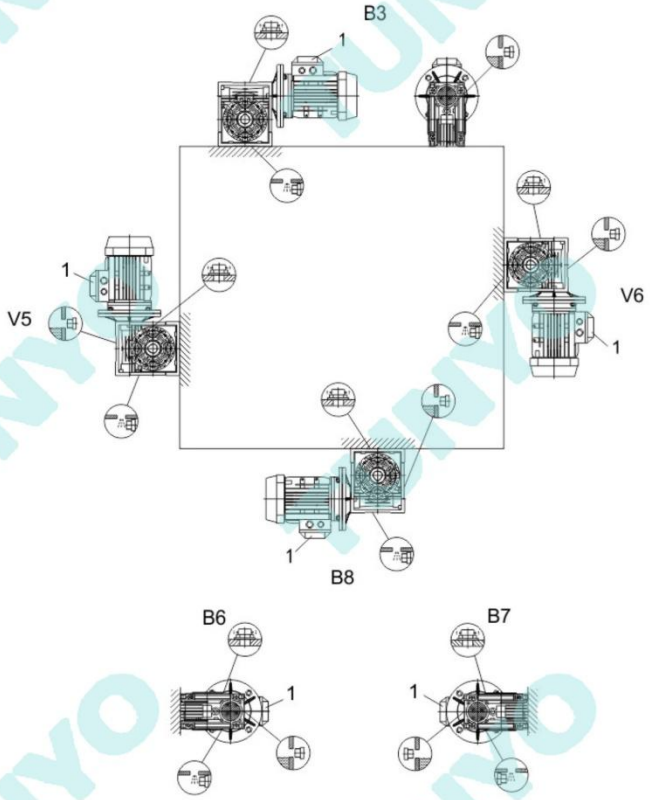

安裝方位圖 Installation positions diagram

◆ DRV..安裝方位 Mounting positions

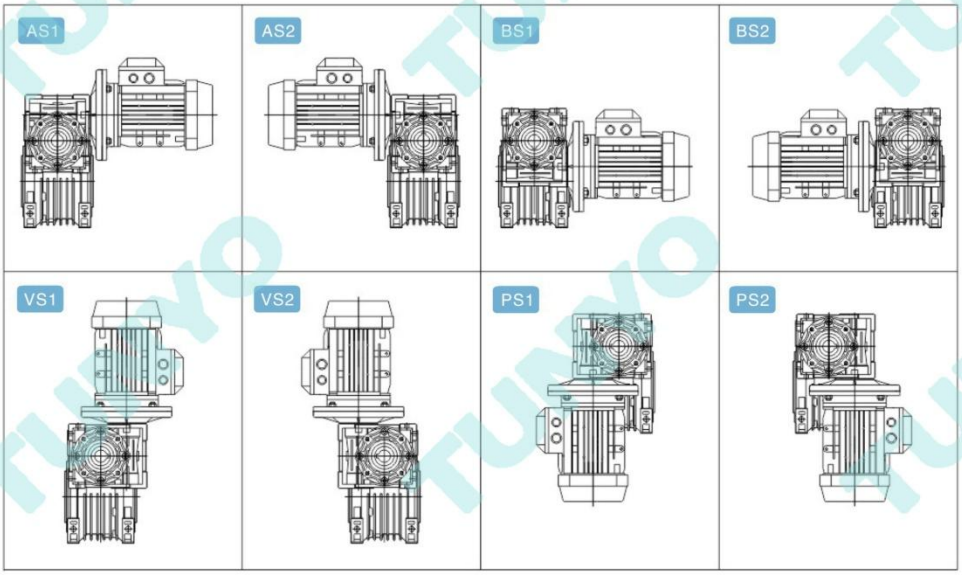

如果没有特殊要求，一般按出厂标准位置如图AS2组合方式和B3位置提供。
Unless specified otherwise, the gear units is supplied with the flange in pos. AS2 referred to position B3.

◆ 旋转方向 Direction of rotation

NMRV、NRV

NRV

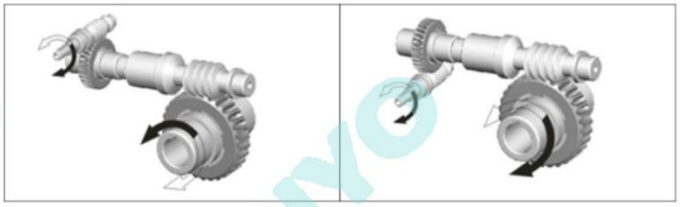

TUNYO®

CCC認證取得
CERTIFICATE OF APPROVAL CCC

CE認證取得
CERTIFICATE OF APPROVAL CE

RoHS認證取得
CERTIFICATE OF APPROVAL ROHS

ISO9001認證取得
CERTIFICATE OF APPROVAL ISO9001

東洋機電(中國)有限公司

服務熱綫: 400-600-2478

北京

電話: 010-57218133　傳真: 010-59703023

上海

電話: 021-39177213　傳真: 021-39177263

廣東

電話: 0769-85269398　傳真: 0769-85269528

E-mail:ch@tunyo.com.cn　Http://www.tunyo.com.cn